SERVICE MANUAL

NJ50PU / NJ51PU

notebook

Notebook Computer

NJ50PU / NJ51PU

Service Manual

Notice

The company reserves the right to revise this publication or to change its contents without notice. Information contained herein is for reference only and does not constitute a commitment on the part of the manufacturer or any subsequent vendor. They assume no responsibility or liability for any errors or inaccuracies that may appear in this publication nor are they in anyway responsible for any loss or damage resulting from the use (or misuse) of this publication.

This publication and any accompanying software may not, in whole or in part, be reproduced, translated, transmitted or reduced to any machine readable form without prior consent from the vendor, manufacturer or creators of this publication, except for copies kept by the user for backup purposes.

Brand and product names mentioned in this publication may or may not be copyrights and/or registered trademarks of their respective companies. They are mentioned for identification purposes only and are not intended as an endorsement of that product or its manufacturer.

Version 1.0
September 2022

Trademarks

Pentium and Celeron are trademarks of Intel Corporation.
Windows® is a registered trademark of Microsoft Corporation.
Other brand and product names are trademarks and /or registered trademarks of their respective companies.

About this Manual

This manual is intended for service personnel who have completed sufficient training to undertake the maintenance and inspection of personal computers.

It is organized to allow you to look up basic information for servicing and/or upgrading components of the ***NJ50PU / NJ51PU*** series notebook PC.

The following information is included:

Chapter 1, Introduction, provides general information about the location of system elements and their specifications.
Chapter 2, Disassembly, provides step-by-step instructions for disassembling parts and subsystems and how to upgrade elements of the system.

Appendix A, Part Lists
Appendix B, Schematic Diagrams

IMPORTANT SAFETY INSTRUCTIONS

Follow basic safety precautions, including those listed below, to reduce the risk of fire, electric shock and injury to persons when using any electrical equipment:

1. Do not use this product near water, for example near a bath tub, wash bowl, kitchen sink or laundry tub, in a wet basement or near a swimming pool.
2. Avoid using a telephone (other than a cordless type) during an electrical storm. There may be a remote risk of electrical shock from lightning.
3. Do not use the telephone to report a gas leak in the vicinity of the leak.
4. Use only the power cord and batteries indicated in this manual. Do not dispose of batteries in a fire. They may explode. Check with local codes for possible special disposal instructions.
5. This product is intended to be supplied by a Listed Power Unit with an AC Input of 100 - 240V, 50 - 60Hz, DC Output of 19V, 2.37A (**45** Watts) minimum AC/DC Adapter.

FCC Statement

This device complies with Part 15 of the FCC Rules. Operation is subject to the following two conditions:
This device may not cause harmful interference.
This device must accept any interference received, including interference that may cause undesired operation.

Instructions for Care and Operation

The notebook computer is quite rugged, but it can be damaged. To prevent this, follow these suggestions:

1. **Don't drop it, or expose it to shock.** If the computer falls, the case and the components could be damaged.

Do not expose the computer to any shock or vibration. 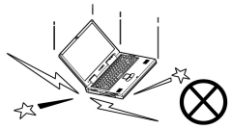	*Do not place it on an unstable surface.* 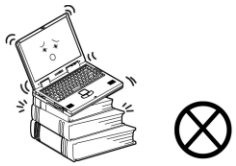	*Do not place anything heavy on the computer.* 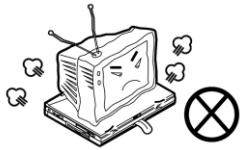

2. **Keep it dry, and don't overheat it.** Keep the computer and power supply away from any kind of heating element. This is an electrical appliance. If water or any other liquid gets into it, the computer could be badly damaged.

Do not expose it to excessive heat or direct sunlight. 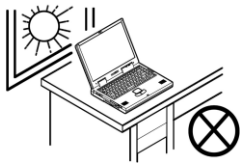	*Do not leave it in a place where foreign matter or moisture may affect the system.*	*Don't use or store the computer in a humid environment.* 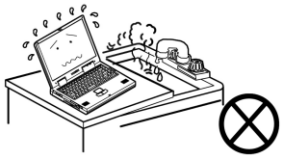	*Do not place the computer on any surface which will block the vents.* 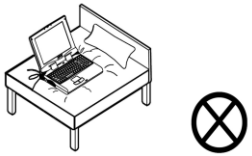

3. **Follow the proper working procedures for the computer**. Shut the computer down properly and don't forget to save your work. Remember to periodically save your data as data may be lost if the battery is depleted.

Do not turn off the power until you properly shut down all programs. 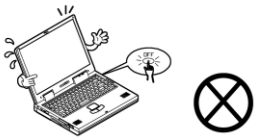	*Do not turn off any peripheral devices when the computer is on.* 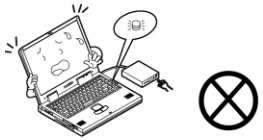	*Do not disassemble the computer by yourself.*	*Perform routine maintenance on your computer.*

4. **Avoid interference.** Keep the computer away from high capacity transformers, electric motors, and other strong magnetic fields. These can hinder proper performance and damage your data.
5. **Take care when using peripheral devices**.

Use only approved brands of peripherals.	*Unplug the power cord before attaching peripheral devices.*
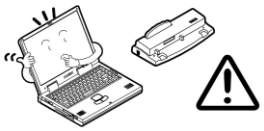	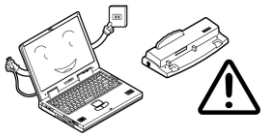

Power Safety

The computer has specific power requirements:

- Only use a power adapter approved for use with this computer.
- Your AC adapter may be designed for international travel but it still requires a steady, uninterrupted power supply. If you are unsure of your local power specifications, consult your service representative or local power company.
- The power adapter may have either a 2-prong or a 3-prong grounded plug. The third prong is an important safety feature; do not defeat its purpose. If you do not have access to a compatible outlet, have a qualified electrician install one.
- When you want to unplug the power cord, be sure to disconnect it by the plug head, not by its wire.
- Make sure the socket and any extension cord(s) you use can support the total current load of all the connected devices.
- Before cleaning the computer, make sure it is disconnected from any external power supplies.

Power Safety Warning

Before you undertake any upgrade procedures, make sure that you have turned off the power, and disconnected all peripherals and cables (including telephone lines and power cord). It is advisable to also remove your battery in order to prevent accidentally turning the machine on.

Do not plug in the power cord if you are wet.	*Do not use the power cord if it is broken.*	*Do not place heavy objects on the power cord.*
	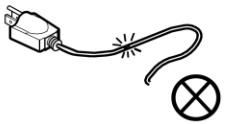	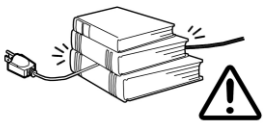

Battery Precautions

- Only use batteries designed for this computer. The wrong battery type may explode, leak or damage the computer.
- Do not continue to use a battery that has been dropped, or that appears damaged (e.g. bent or twisted) in any way. Even if the computer continues to work with a damaged battery in place, it may cause circuit damage, which may possibly result in fire.
- Recharge the batteries using the notebook's system. Incorrect recharging may make the battery explode.
- Do not try to repair a battery pack. Refer any battery pack repair or replacement to your service representative or qualified service personnel.
- Keep children away from, and promptly dispose of a damaged battery. Always dispose of batteries carefully. Batteries may explode or leak if exposed to fire, or improperly handled or discarded.
- Keep the battery away from metal appliances.
- Affix tape to the battery contacts before disposing of the battery.
- Do not touch the battery contacts with your hands or metal objects.

Battery Guidelines

The following can also apply to any backup batteries you may have.

- If you do not use the battery for an extended period, then remove the battery from the computer for storage.
- Before removing the battery for storage charge it to 60% - 70%.
- Check stored batteries at least every 3 months and charge them to 60% - 70%.

Battery Disposal

The product that you have purchased contains a rechargeable battery. The battery is recyclable. At the end of its useful life, under various state and local laws, it may be illegal to dispose of this battery into the municipal waste stream. Check with your local solid waste officials for details in your area for recycling options or proper disposal.

Caution

Danger of explosion if battery is incorrectly replaced. Replace only with the same or equivalent type recommended by the manufacturer. Discard used battery according to the manufacturer's instructions.

Battery Level

Click the battery icon in the taskbar to see the current battery level and charge status. A battery that drops below a level of 10% will not allow the computer to boot up. Make sure that any battery that drops below 10% is recharged within one week.

Related Documents

You may also need to consult the following manual for additional information:

User's Manual on CD/DVD

This describes the notebook PC's features and the procedures for operating the computer and its ROM-based setup program. It also describes the installation and operation of the utility programs provided with the notebook PC.

System Startup

1. Remove all packing materials.
2. Place the computer on a stable surface.
3. Insert the battery and make sure it is locked in position.
4. Securely attach any peripherals you want to use with the computer (e.g. keyboard and mouse) to their ports.
5. **When first setting up the computer use the following procedure** (as to safeguard the computer during shipping, the battery will be locked to not power the system until first connected to the AC/DC adapter and initially set up as below):
   - Attach the AC/DC adapter cord to the DC-In jack on the left of the computer, then plug the AC power cord into an outlet, and connect the AC power cord to the AC/DC adapter and **leave it there for 6 seconds or longer**.
   - Remove the adapter cord from the computer's DC-In jack, and then plug it back in again; the battery will now be unlocked.
6. Use one hand to raise the lid/LCD to a comfortable viewing angle (do not exceed 130 degrees); use the other hand (as illustrated in Figure 1) to support the base of the computer (**Note**: **Never** lift the computer by the lid/LCD).
7. Press the power button to turn the computer "on".

Powering the Computer On

After every disassembly, make sure that the bottom case's screws are all inserted and tightened before turning the computer on.

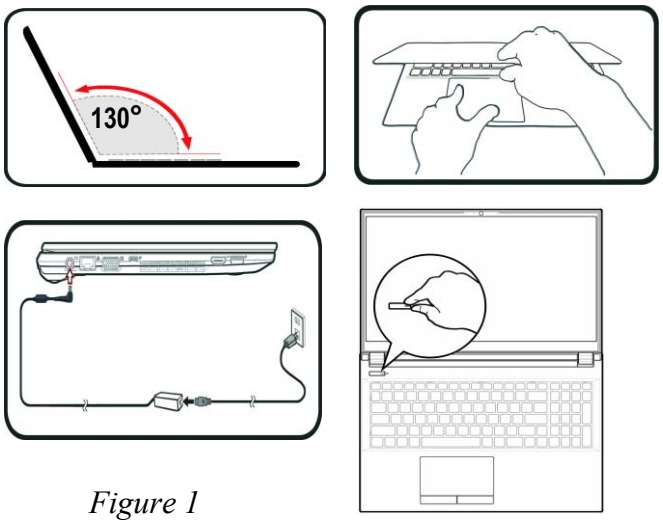

Figure 1
Opening the Lid/LCD/ Computer with AC/DC Adapter Plugged-In

Shut Down

Note that you should always shut your computer down by choosing **Shut Down** from the **Start** Menu.

This will help prevent hard disk or system problems.

Contents

Introduction 1-1

Overview 1-1
Specifications 1-2
External Locator - Top View with LCD Panel Open 1-4
External Locator - Front & Right Side Views 1-5
External Locator - Left Side & Rear View 1-6
External Locator - Bottom View 1-7
Mainboard Overview - Top (Key Parts) 1-8
Mainboard Overview - Bottom (Key Parts) 1-9
Mainboard Overview - Top (Connectors) 1-10
Mainboard Overview - Bottom (Connectors) 1-11

Disassembly 2-1

Overview 2-1
Maintenance Tools 2-2
Connections 2-2
Maintenance Precautions 2-3
Disassembly Steps 2-4
Removing the Battery 2-5
Removing the Hard Disk Drive 2-6
Removing the System Memory (RAM) 2-8
Removing the Keyboard 2-10
Removing the Optical (CD/DVD) Device 2-11
Removing the Wireless LAN Module 2-12
Wireless LAN, and Combo Module Cables 2-13
Removing the 4G Module 2-14
Removing the M.2 SSD Module 2-15
Removing the CCD 2-16

Part Lists A-1

Part List Illustration Location A-2
Top A-3
Bottom A-4
LCD A-5
Dummy ODD A-6
DVD A-7
HDD A-8
Second HDD A-9
MB A-10

Schematic Diagrams.....B-1

System Block Diagram B-2
Processor 1/13 .....B-3
Processor 2/13 .....B-4
Processor 3/13 .....B-5
Processor 4/13 .....B-6
Processor 5/13 .....B-7
Processor 6/13 .....B-8
Processor 7/13 .....B-9
Processor 8/13 .....B-10
Processor 9/13 .....B-11
Processor 10/13 .....B-12
Processor 11/13 .....B-13
Processor 12/13 .....B-14
Processor 13/13 .....B-15
DDR4 SO_DIMM_A B-16
DDR4 SO_DIMM_B B-17
Panel, Inverter B-18
HDMI B-19
DP to VGA IT6516 .....B-20
RGB KB B-21
TPM, PW Button, LID SW, LED B-22

Type-C B-23
PD Controller IT8851 ..... B-24
M Key PCIE SSD B-25
USB, HDD, ODD B-26
LAN I219V B-27
Card Reader OZ711 ..... B-28
M.2 Card (3G/LTE) B-29
M.2 Card (BT/WLAN) B-30
Audio Codec B-31
CONN FAN, TP, CCD, LED B-32
KBC ITE IT5570 ..... B-33
VDD3 / VDD5 ..... B-34
3.3V, 5V, 3VS, 5VS, CTL B-35
2.5V, VCCST, VCCSTG B-36
VDDQ, VDDQ_VTT, 1.8VA B-37
MP2964 Controller B-38
VCore B-39
VCCGT B-40
VCCIN B-41
Charger B-42
AC IN B-43
Audio Board B-44
Audio Board B-45
Click Board B-46
ODD to HDD Caddy B-47
LID SW Board B-48
Power Seq. B-49

Chapter 1: Introduction

Overview

This manual covers the information you need to service or upgrade the ***NJ50PU / NJ51PU*** series notebook computer. Information about operating the computer (e.g. getting started, and the *Setup* utility) is in the *User's Manual*. Information about dri-vers (e.g. VGA & audio) is also found in the *User's Manual*. The manual is shipped with the computer.

Operating systems (e.g. *Window 10,* etc.) have their own manuals as do application softwares (e.g. word processing and database programs). If you have questions about those programs, you should consult those manuals.

The ***NJ50PU / NJ51PU*** series notebook is designed to be upgradeable. See ***Disassembly on page 2 - 1*** for a detailed description of the upgrade procedures for each specific component. Please take note of the warning and safety information indicated by the "🔔" symbol.

The balance of this chapter reviews the computer's technical specifications and features.

Specifications

Latest Specification Information

The specifications listed here are correct at the time of sending them to the press. Certain items (particularly processor types/speeds) may be changed, delayed or updated due to the manufacturer's release schedule. Check with your service center for more details.

Note that this computer model series may support a range of CPUs and/or video adapters.

To find out which CPU is installed on your system go to the **Start** menu and select **Settings**, and then select **System** and click **About**. This will also provide information on the amount of **Installed RAM** etc.

To get information on your system's **video adapter** go to the **Start** menu and select **Settings**, and then select **System** and click **Display > Advanced display settings > Display adapter properties**.

CPU

The CPU is not a user serviceable part. Accessing the CPU in any way may violate your warranty.

Processor Options

Intel® Core™ i7 Processor
i7-1255U (1.70GHz)
Intel® Core™ i5 Processor
i5-1235U (1.30GHz)
Intel® Core™ i3 Processor
i3-1215U (1.20GHz)

BIOS

Insyde BIOS (256Mb SPI Flash ROM)

Memory

Dual Channel DDR4
Two 260 Pin SO-DIMM Sockets Supporting **DDR4 3200MHz** Memory
Memory Expandable up to 64GB
Compatible with 8GB, 16GB or 32GB Modules
(The real memory operating frequency depends on the FSB of the processor.)

LCD Options

LCD, 15.6" (39.62cm), 16:9, HD (1366x768)/FHD (1920x1080)

Storage

One Changeable 2.5" 7mm (h) SATA HDD/SSD
One M.2 PCIe **Gen4 x4** Solid State Drive (SSD)

(**Factory Option**) One 9.0/9.5mm(h) Optical Device Type Drive (DVD Writer)
Or
(**Factory Option**) Dummy ODD
Or
(**Factory Option**) 7mm (h) 2nd HDD/SSD Caddy

Video Adapter

Intel Iris Xe Graphics (i7-1255U, i5-1235U)
HDR Support
Rec. 2020 (Wide Color Gamut)
Microsoft DirectX® 12 Compatible
Intel UHD Graphics (i3-1215U)
HDR Support
Rec. 2020 (Wide Color Gamut)
Microsoft DirectX® 12 Compatible

Pointing Device

Built-in Touchpad (with Microsoft PTP Multi Gesture & Scrolling Functionality)

Keyboard

Full-size Keyboard (with Numeric Keypad)
Or
(**Option**) Full-size **Multi-Color** LED Keyboard (with Numeric Keypad)

Audio

High Definition Audio Compliant Interface
2 * Built-In Speakers
Built-In Array Microphone
Sound Blaster Cinema 6+

Security

Security (Kensington® Type) Lock Slot
BIOS Password
Intel PTT for Systems Without TPM Hardware
(**Factory Option**) TPM 2.0

M.2 Slots

Slot 1 for **Combo WLAN and Bluetooth** Module
Slot 2 for **PCIe Gen4 x4 SSD**
(**Factory Option**) Slot 3 for **4G** Module

Card Reader

Embedded Multi-In-1 Card Reader
MMC (MultiMedia Card) / RS MMC
SD (Secure Digital) / Mini SD / SDHC/ SDXC

Interface

One USB 2.0 Port
One USB 3.2 Gen 1 Type-A Port
One USB 3.2 Gen 2 Type-C Port with DisplayPort and Power Delivery (DC-In)

One USB 3.2 Gen 1 Type-A Port
Or
(**Factory Option**) One Powered USB 3.2 Gen 1 Type-A Port

One HDMI-Out Port
One External Monitor (VGA) Port
One Microphone-In Jack
One 2-In-1 Audio Jack (Headphone / Microphone)
One RJ-45 LAN Jack
One DC-in Jack

Communication

Built-In 10/100/1000Mb Base-TX Ethernet LAN
1.0M HD Webcam
Or
(**Factory Option**) 2.0M FHD Webcam

(**Factory Option**) **4G** M.2 Module

WLAN/ Bluetooth M.2 Modules:

(**Factory Option**) Intel® Dual Band Wi-Fi 6E AX211, 2x2 AX Wireless LAN + Bluetooth
(**Factory Option**) Intel® Dual Band Wi-Fi 6E AX210, 2x2 AX Wireless LAN + Bluetooth
(**Factory Option**) Intel® Dual Band Wi-Fi 6 AX201, 2x2 AX Wireless LAN + Bluetooth
(**Factory Option**) Intel® Dual Band Wi-Fi 5 Wireless-AC 9462, 1x1 AC Wireless LAN + Bluetooth

Power

Full Range AC/DC Adapter
AC Input: 100 - 240V, 50 - 60Hz
DC Output: 19V, 2.37A (**45W**)

Removable 4 Cell Smart Lithium-Ion Battery Pack, 32WH
(**Factory Option**) Removable 4 Cell Smart Lithium-Ion Battery Pack, 47WH

Environmental Spec

Temperature
Operating: 5°C - 35°C
Non-Operating: -20°C - 60°C
Relative Humidity
Operating: 20% - 80%
Non-Operating: 10% - 90%

Dimensions & Weight

361mm (w) * 256mm (d) * 24.1mm (h)
(Height Excluding Battery Area)
2.0kg (Barebone with ODD and 32WH Battery)
Or
361mm (w) * 256mm (d) * 24.4mm (h)
(Height Excluding Battery Area)
2.1kg (Barebone with ODD and 32WH Battery)

External Locator - Top View with LCD Panel Open

Figure 1
Top View

1. Webcam
2. *Camera LED
   When the PC camera is in use, the LED will be illuminated in white.
3. Built-In Array Microphone
4. Display
5. Power Button
6. Keyboard
7. Touchpad & Buttons

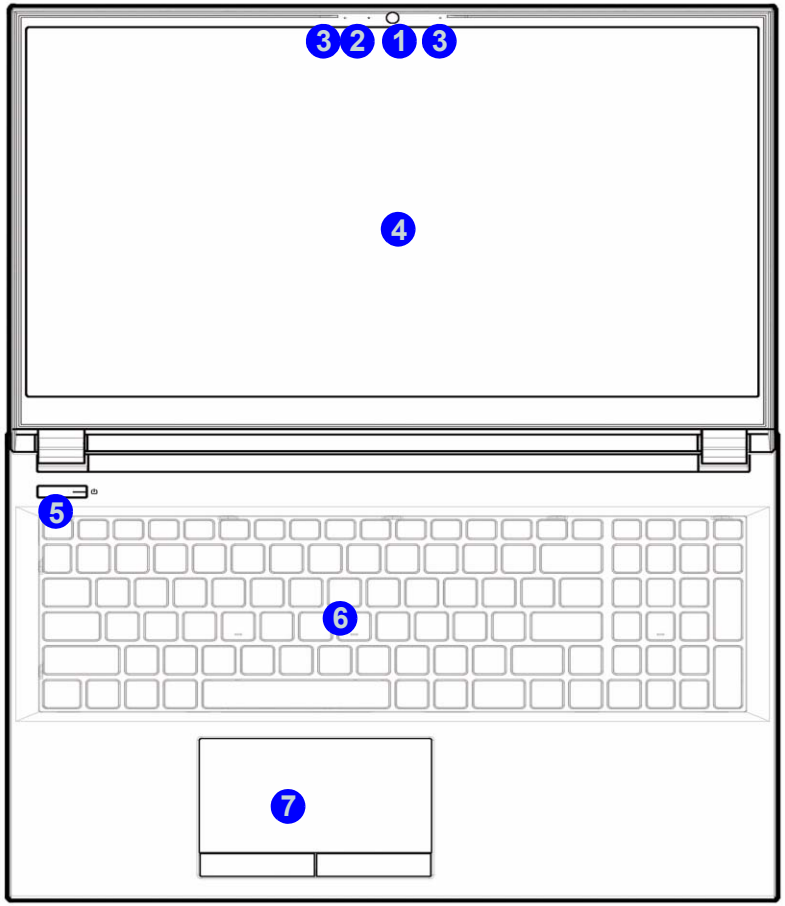

External Locator - Front & Right Side Views

FRONT VIEW

Figure 2
Front View

1. LED Indicators
2. Multi-in-1 Card Reader

RIGHT SIDE VIEW

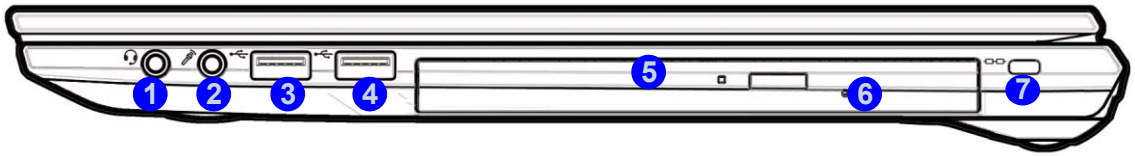

Figure 3
Right Side View

1. 2-In-1 Audio Jack (Headphone and Microphone)
2. Microphone-In Jack
3. USB 3.2 Gen 1 Type-A Port
4. USB 2.0 Port
5. (**Factory Option**) Dummy ODD/DVD Writer/2nd HDD/ SSD Caddy
6. Emergency Eject Hole
7. Security Lock Slot

External Locator - Left Side & Rear View

Figure 4
Left Side View

1. DC-In Jack
2. RJ-45 LAN Jack
3. External Monitor Port
4. USB 3.2 Gen 2 Type-C Port with DisplayPort and Power Delivery
5. Vent
6. HDMI-Out Port
7. USB 3.2 Gen 1 Type-A Port
   Or
   (**Factory Option**) Powered USB 3.2 Gen 1 Type-A Port

LEFT SIDE VIEW

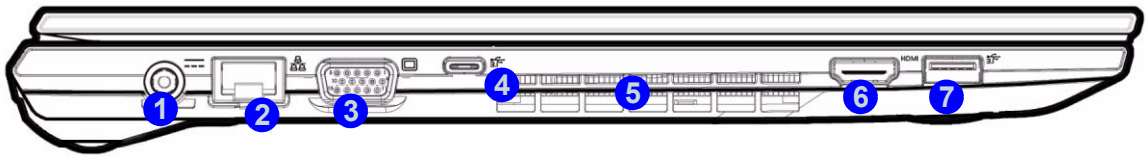

Figure 5
Rear View

1. Battery

REAR VIEW

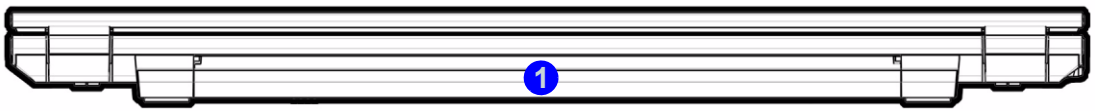

External Locator - Bottom View

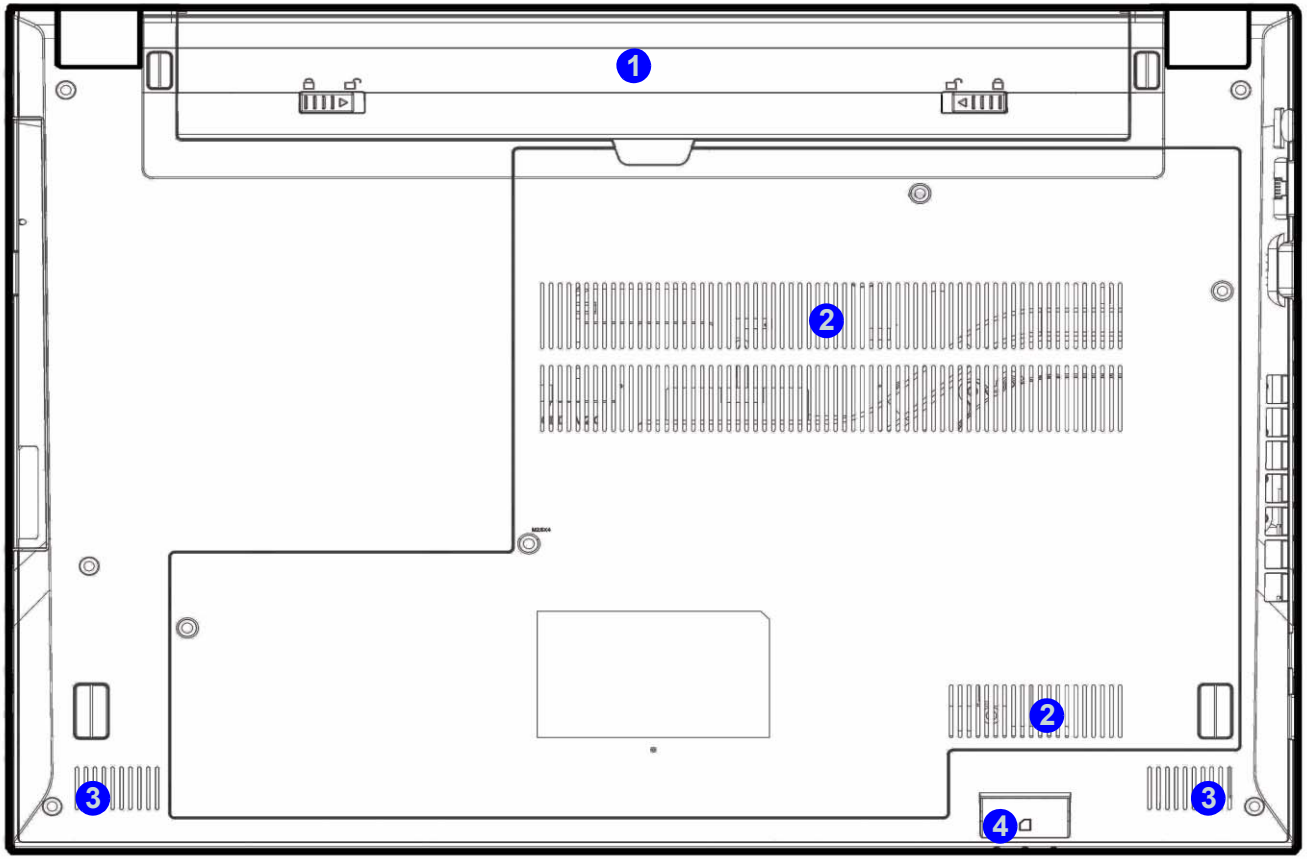

Figure 6
Bottom View

1. Battery
2. Vent
3. Speakers
4. Multi-in-1 Card Reader

Overheating

To prevent your computer from overheating, make sure nothing blocks any vent while the computer is in use.

Figure 7
Mainboard Top Key Parts

Mainboard Overview - Top (Key Parts)

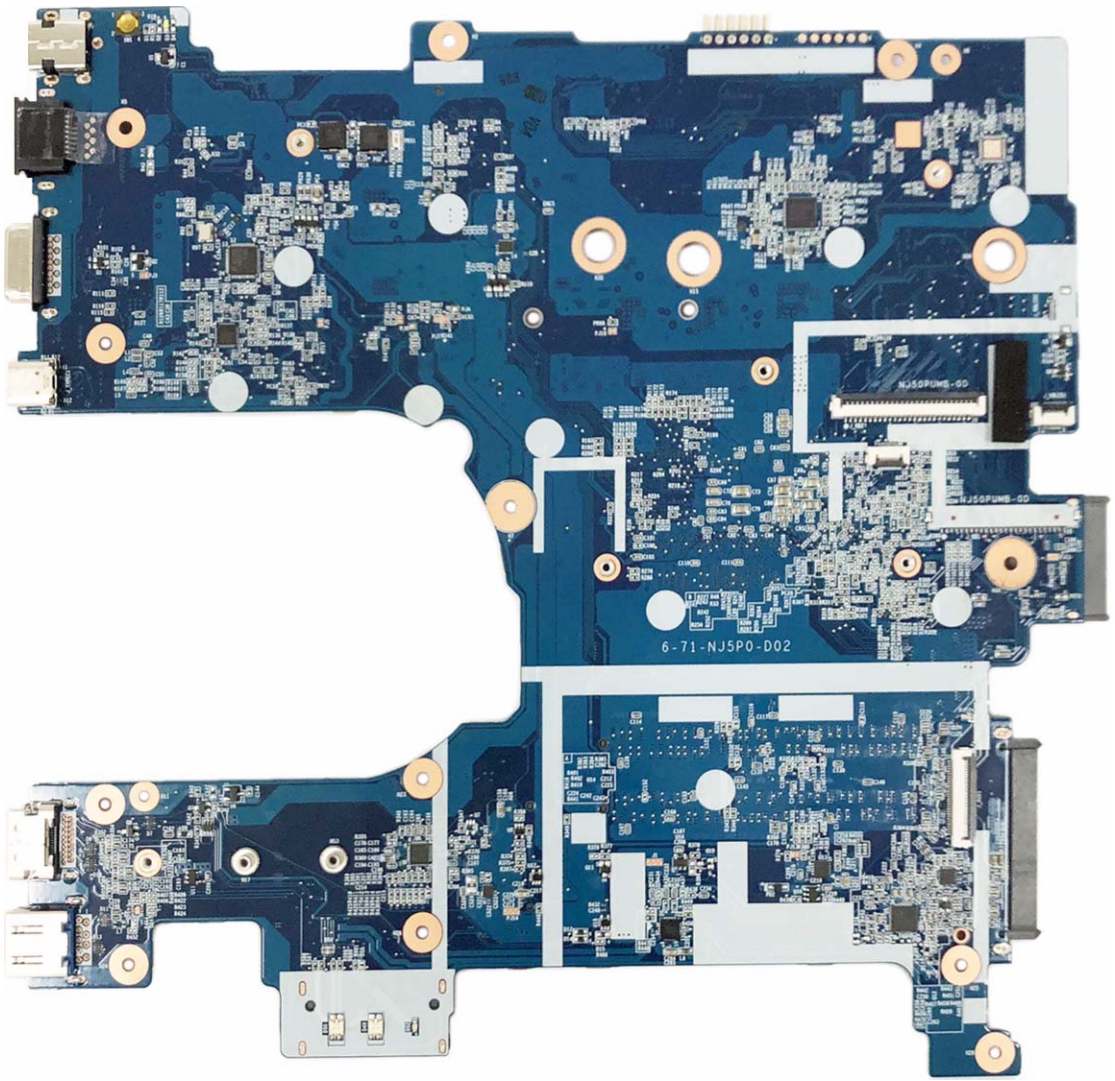

Mainboard Overview - Bottom (Key Parts)

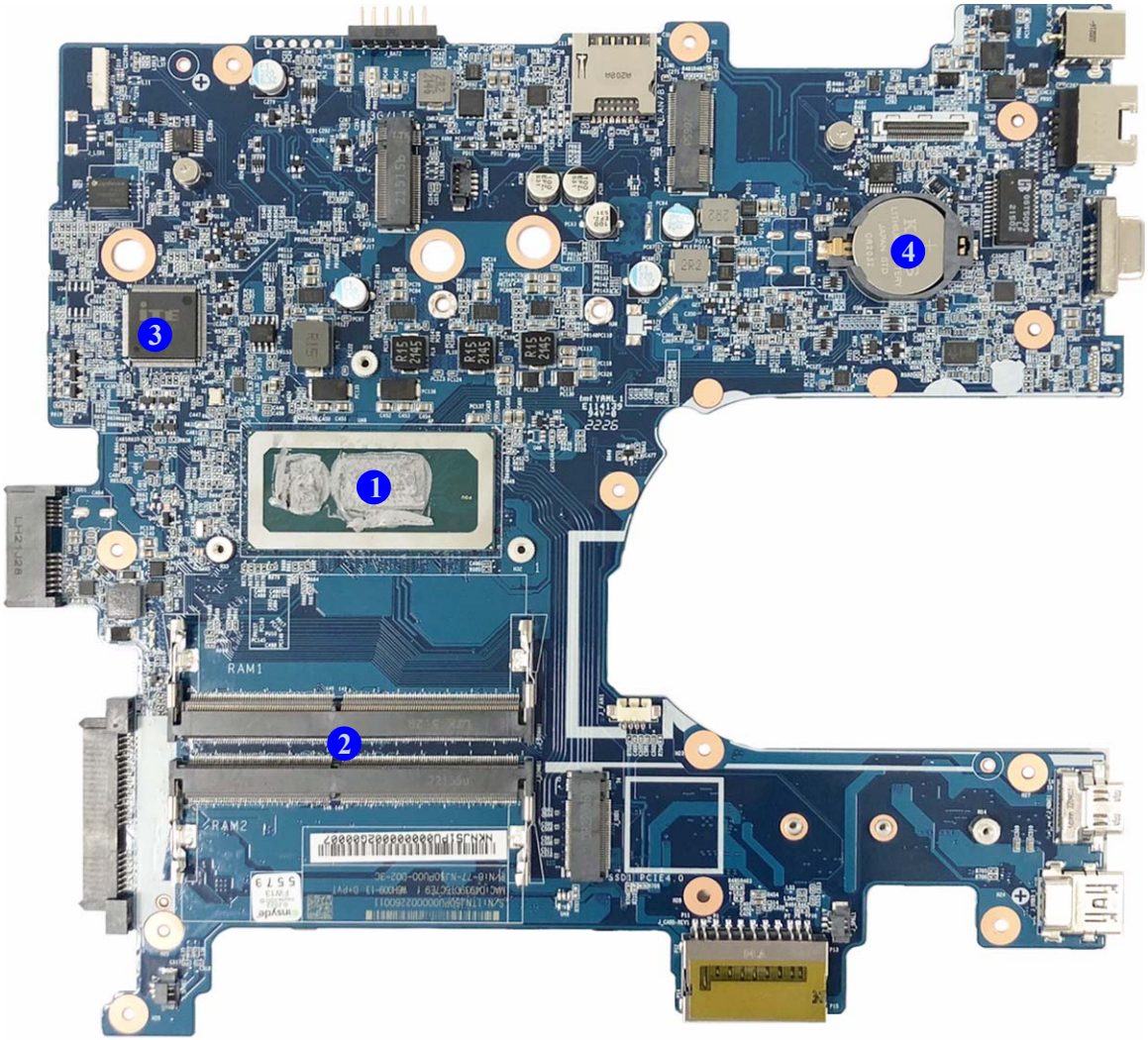

Figure 8
Mainboard Bottom Key Parts

1. CPU
2. Memory Slots DDR4 SO-DIMM
3. KBC-ITE IT5570
4. CMOS Battery

Mainboard Overview - Top (Connectors)

Figure 9
Mainboard Top Connectors

1. DC-In Jack
2. RJ-45 LAN Jack
3. External Monitor Port
4. USB 3.2 Gen 2 Type-C Port with Power Delivery
5. HDMI-Out Port
6. USB 3.2 Gen 1 Type-A Port
   Or
   (**Factory Option**) Powered USB 3.2 Gen 1 Type-A Port
7. Audio Board Cable Connector
8. Keyboard Cable Connector
9. LED Keyboard Connector
10. Touchpad Connector

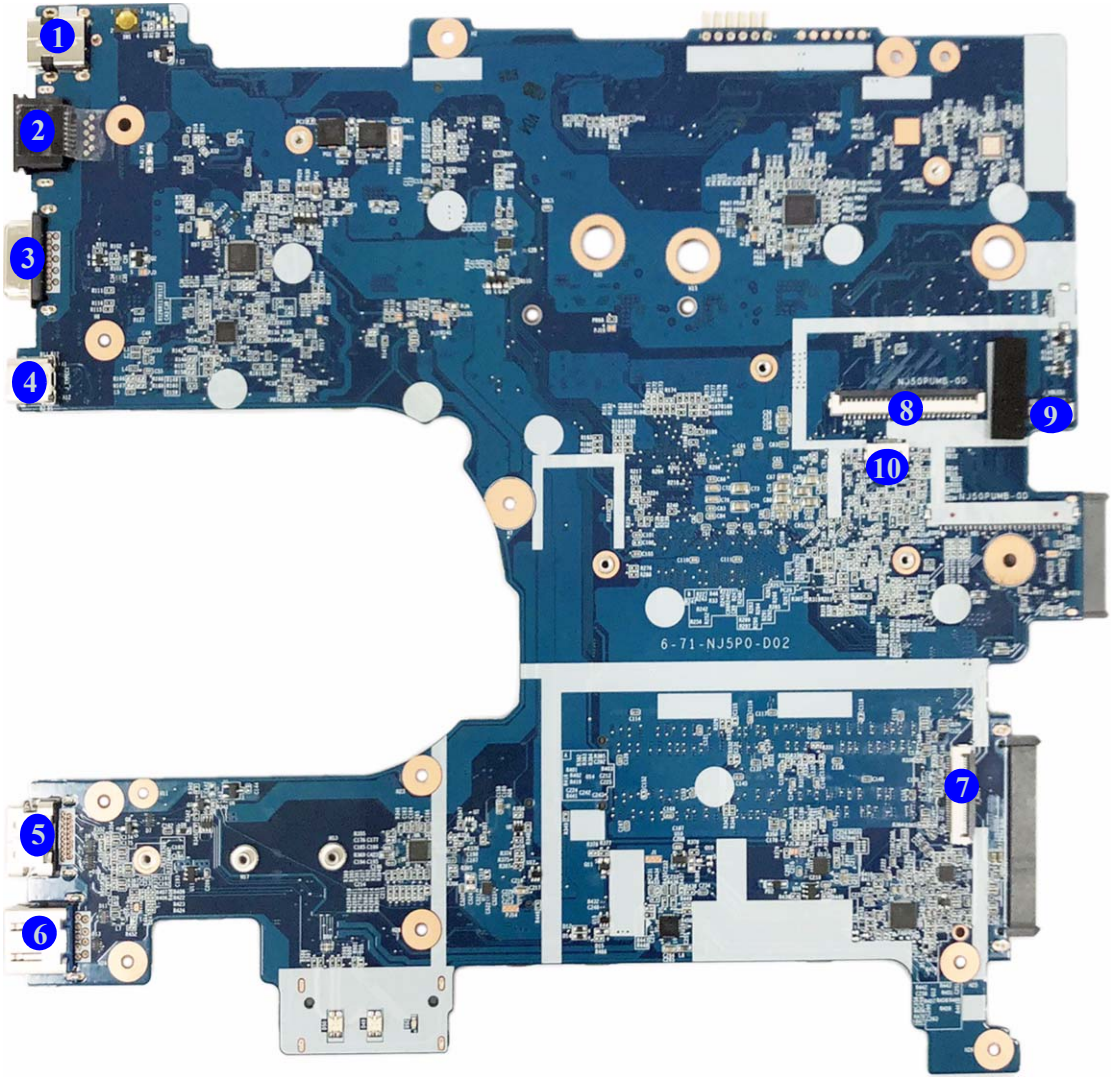

Mainboard Overview - Bottom (Connectors)

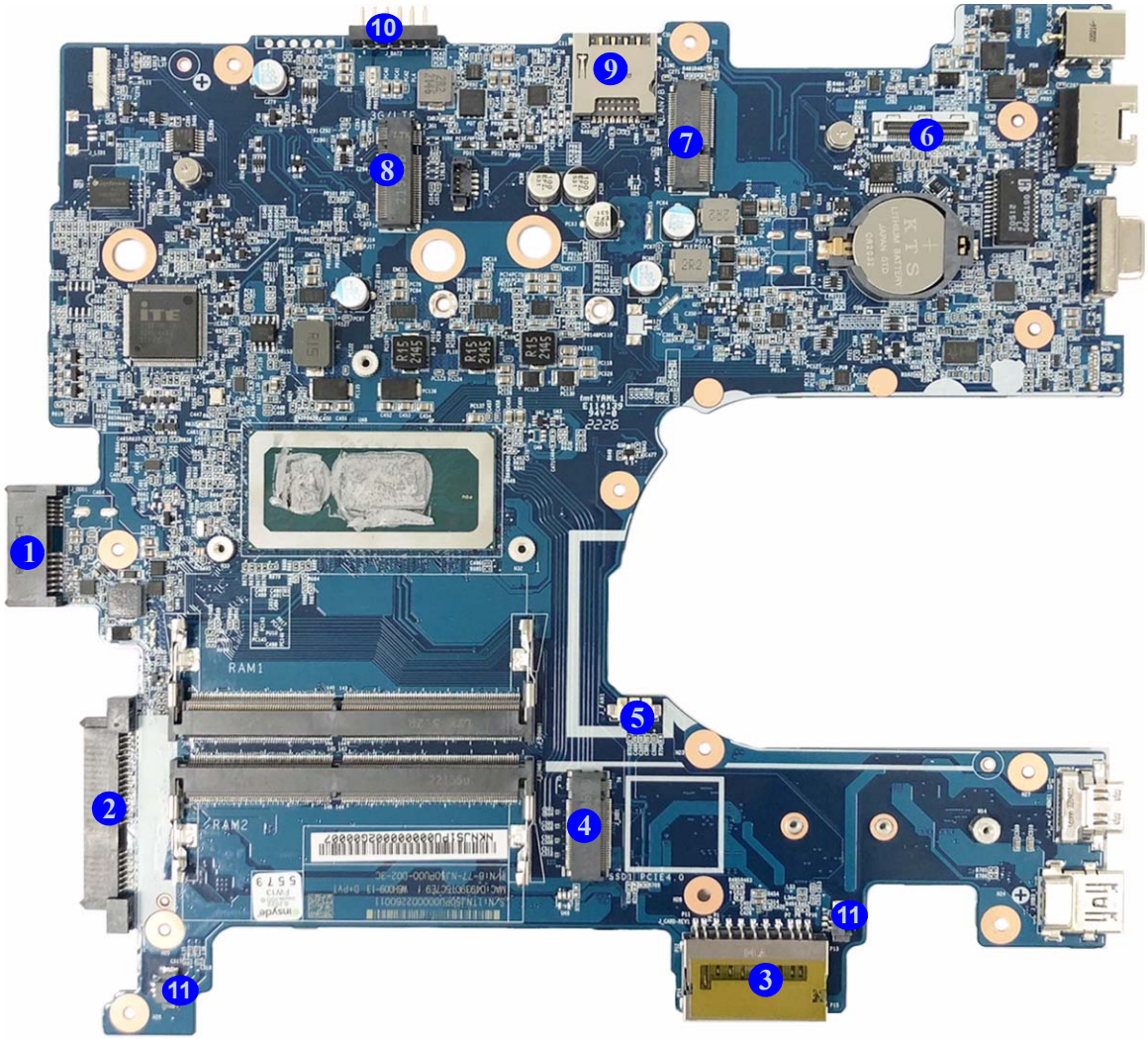

Figure 10
Mainboard Bottom Connectors

1. ODD Connector
2. HDD Connector
3. Multi-in-1 Card Reader
4. M.2 Card Connector
5. Fan Connector
6. LCD Cable Connector
7. WLAN Connector
8. LTE Connector
9. SIM Card Reader
10. Battery Connector
11. Speaker Connector

Chapter 2: Disassembly

Overview

This chapter provides step-by-step instructions for disassembling the ***NJ50PU / NJ51PU*** series notebook's parts and subsystems. When it comes to reassembly, reverse the procedures (unless otherwise indicated).

We suggest you completely review any procedure before you take the computer apart.

To make the disassembly process easier each section may have a box in the page margin. Information contained under the figure # will give a synopsis of the sequence of procedures involved in the disassembly procedure. A box with a lists the relevant parts you will have after the disassembly process is complete. **Note**: The parts listed will be for the disassembly procedure listed ONLY, and not any previous disassembly step(s) required. Refer to the part list for the previous disassembly procedure. The amount of screws you should be left with will be listed here also.

A box with a will also provide any possible helpful information. A box with a contains warnings.

An example of these types of boxes are shown in the sidebar.

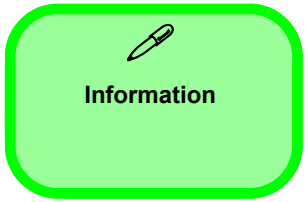

NOTE: All disassembly procedures assume that the system is turned **OFF**, and disconnected from any power supply (the battery is removed too).

Maintenance Tools

The following tools are recommended when working on the notebook PC:

- M3 Philips-head screwdriver
- M2.5 Philips-head screwdriver (magnetized)
- M2 Philips-head screwdriver
- Small flat-head screwdriver
- Pair of needle-nose pliers
- Anti-static wrist-strap

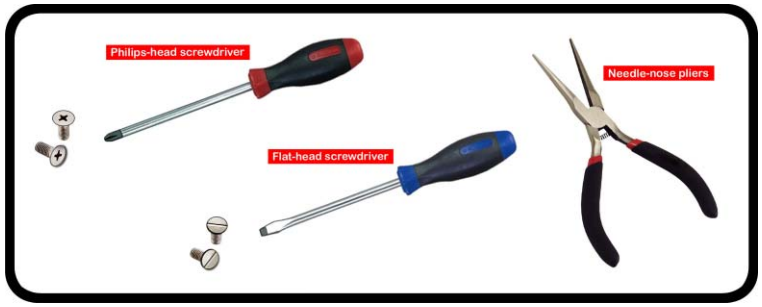

Connections

Connections within the computer are one of four types:

Locking collar sockets for ribbon connectors	To release these connectors, use a small flat-head screwdriver to gently pry the locking collar away from its base. When replacing the connection, make sure the connector is oriented in the same way. The pin1 side is usually not indicated.
Pressure sockets for multi-wire connectors	To release this connector type, grasp it at its head and gently rock it from side to side as you pull it out. Do not pull on the wires themselves. When replacing the connection, do not try to force it. The socket only fits one way.
Pressure sockets for ribbon connectors	To release these connectors, use a small pair of needle-nose pliers to gently lift the connector away from its socket. When replacing the connection, make sure the connector is oriented in the same way. The pin1 side is usually not indicated.
Board-to-board or multi-pin sockets	To separate the boards, gently rock them from side to side as you pull them apart. If the connection is very tight, use a small flat-head screwdriver - use just enough force to start.

Maintenance Precautions

The following precautions are a reminder. To avoid personal injury or damage to the computer while performing a removal and/or replacement job, take the following precautions:

1. **Don't drop it**. Perform your repairs and/or upgrades on a stable surface. If the computer falls, the case and other components could be damaged.
2. **Don't overheat it**. Note the proximity of any heating elements. Keep the computer out of direct sunlight.
3. **Avoid interference**. Note the proximity of any high capacity transformers, electric motors, and other strong magnetic fields. These can hinder proper performance and damage components and/or data. You should also monitor the position of magnetized tools (i.e. screwdrivers).
4. **Keep it dry**. This is an electrical appliance. If water or any other liquid gets into it, the computer could be badly damaged.
5. **Be careful with power**. Avoid accidental shocks, discharges or explosions.
   •Before removing or servicing any part from the computer, turn the computer off and detach any power supplies.
   •When you want to unplug the power cord or any cable/wire, be sure to disconnect it by the plug head. Do not pull on the wire.
6. **Peripherals** – Turn off and detach any peripherals.
7. **Beware of static discharge**. ICs, such as the CPU and main support chips, are vulnerable to static electricity. Before handling any part in the computer, discharge any static electricity inside the computer. When handling a printed circuit board, do not use gloves or other materials which allow static electricity buildup. We suggest that you use an anti-static wrist strap instead.
8. **Beware of corrosion**. As you perform your job, avoid touching any connector leads. Even the cleanest hands produce oils which can attract corrosive elements.
9. **Keep your work environment clean**. Tobacco smoke, dust or other air-born particulate matter is often attracted to charged surfaces, reducing performance.
10. **Keep track of the components**. When removing or replacing any part, be careful not to leave small parts, such as screws, loose inside the computer.

Power Safety Warning

Before you undertake any upgrade procedures, make sure that you have turned off the power, and disconnected all peripherals and cables (including telephone lines and power cord). It is advisable to also remove your battery in order to prevent accidentally turning the machine on.

Cleaning

Do not apply cleaner directly to the computer, use a soft clean cloth.
Do not use volatile (petroleum distillates) or abrasive cleaners on any part of the computer.
(For Computer Models Supplied with Light Blue Cleaning Cloth) Some computer models in this series come supplied with a light blue cleaning cloth. To clean the computer case with this cloth follow the instructions below.

- Power off the computer and peripherals.
- Disconnect the AC/DC adapter from the computer.
- Use a little water to dampen the cloth slightly.
- Clean the computer case with the cloth.
- Dry the computer with a dry cloth, or allow it time to dry before turning on.
- Reconnect the AC/DC adapter and turn the computer on.

Disassembly Steps

The following table lists the disassembly steps, and on which page to find the related information. **PLEASE PERFORM THE DISASSEMBLY STEPS IN THE ORDER INDICATED.**

To remove the Battery:

1. Remove the battery *page 2 - 5*

To remove the HDD:

1. Remove the battery *page 2 - 5*
2. Remove the HDD *page 2 - 6*

To remove the System Memory:

1. Remove the battery *page 2 - 5*
2. Remove the HDD *page 2 - 6*
3. Remove the system memory *page 2 - 8*

To remove the Keyboard:

1. Remove the battery *page 2 - 5*
2. Remove the HDD *page 2 - 6*
3. Remove the keyboard *page 2 - 10*

To remove the Optical Device:

1. Remove the battery *page 2 - 5*
2. Remove the HDD *page 2 - 6*
3. Remove the Optical Device *page 2 - 8*

To remove the Wireless LAN Module:

1. Remove the battery *page 2 - 5*
2. Remove the HDD *page 2 - 6*
3. Remove the WLAN *page 2 - 12*

To remove the 4G Module:

1. Remove the battery *page 2 - 5*
2. Remove the HDD *page 2 - 6*
3. Remove the 4G *page 2 - 14*

To remove the M.2 SSD Module:

1. Remove the battery *page 2 - 5*
2. Remove the HDD *page 2 - 6*
3. Remove the SSD module *page 2 - 15*

To remove the CCD Module:

1. Remove the battery *page 2 - 5*
2. Remove the HDD *page 2 - 6*
3. Remove the CCD module *page 2 - 16*

Removing the Battery

1. Turn **off** the computer, turn it over.
2. Slide the latch 1 in the direction of the arrow (***Figure 1a***).
3. Slide the latch 2 in the direction of the arrow, and hold it in place (***Figure 1a***).
4. Turn the battery 3 in the direction of the arrow 4 and lift it out (***Figure 1b***).
5. Insert a new battery 3 by aligning the battery to the pins 5 & 6 (***Figure 1c***).
6. Turn the battery 3 in the direction of the arrow 7 (***Figure 1d***).
7. Slide the latch 8 in the direction of the arrow to lock it in place (***Figure 1e***).

Figure 1
Battery Removal

a. Slide the latch and hold it in place.
b. Turn the battery in the direction of the arrow and lift the battery out.
c. Insert a new battery by aligning it to the pins.
d. Turn the battery in the direction of the arrow.
e. Lock the latch in place.

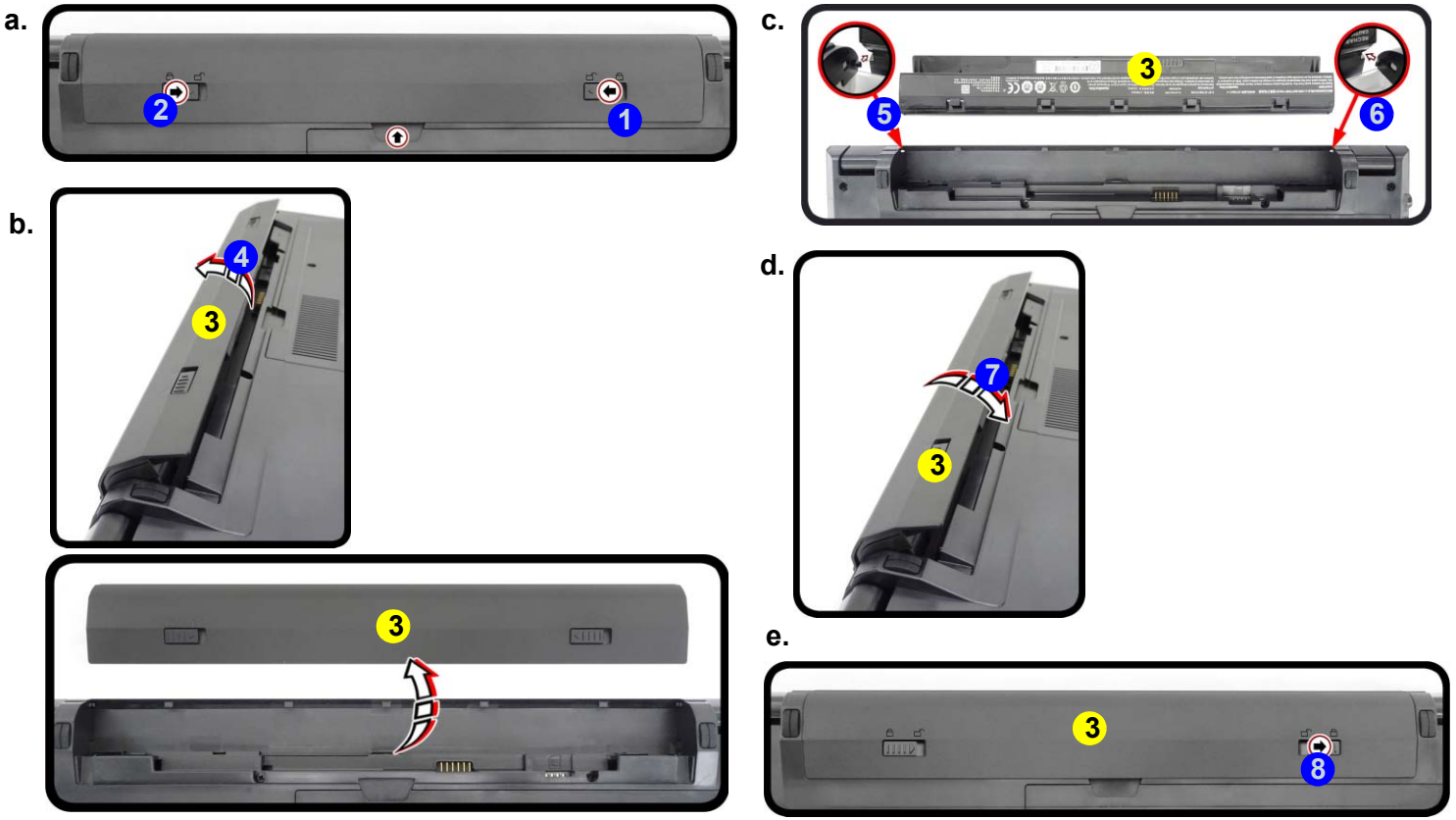

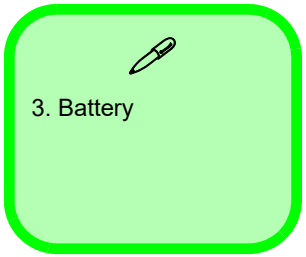

Removing the Hard Disk Drive

Figure 2
HDD Assembly Removal

a. Remove the screws.
b. Remove the bottom case.
c. Locate the HDD.

The hard disk drive can be taken out to accommodate other 2.5" serial (SATA) hard disk drives with a height of 7.0mm (h). Follow your operating system's installation instructions, and install all necessary drivers and utilities (as outlined in **Chapter 4 of the User's Manual**) when setting up a new hard disk.

Hard Disk Upgrade Process

1. Turn **off** the computer, and remove the battery (*page 2 - 5*).
2. Locate the component bay cover and remove screws 1 - 4 (*Figure 2a*).
3. Lift the component bay cover 5 as shown by the arrow 6 (*Figure 2b*).
4. The HDD will be visible at point 7 on the mainboard (*Figure 2c*).

Powering the Computer On

After every disassembly, make sure that the bottom case's screws are all inserted and tightened before opening the Lid/LCD and turning the computer on.

5. Component Bay Cover

- 4 Screws

a.

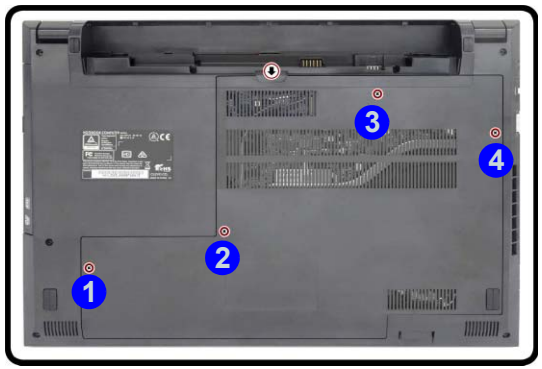

b.

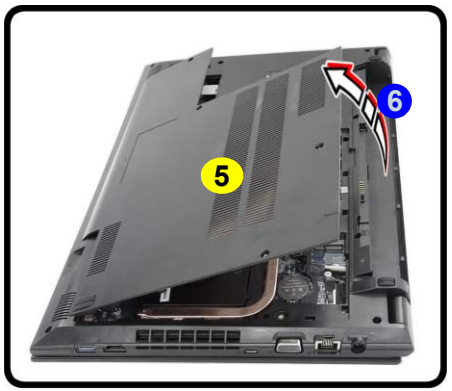

c.

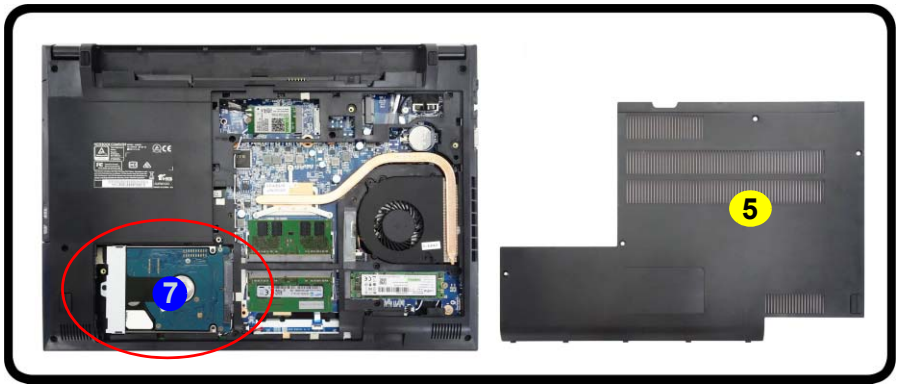

5. Remove screw 8 from the HDD assembly (*Figure 3d*).
6. Slightly lift and pull the hard disk assembly up using the tab 9 (*Figure 3e*).
7. Lift the hard disk assembly 10 out of the bay 11 (*Figure 3f*).
8. Remove screws 12 - 13 and bracket 14 from the hard disk 15 (*Figure 3g*).
9. Reverse the process to install a new hard disk (do not forget to replace the screws).

Figure 3
HDD Assembly Removal (cont'd.)

d. Remove the screws.
e. Slightly lift and pull the HDD in the direction of the arrow.
f. Lift the HDD assembly out of the bay.
g. Remove the screws and bracket from the HDD.

d.

e.

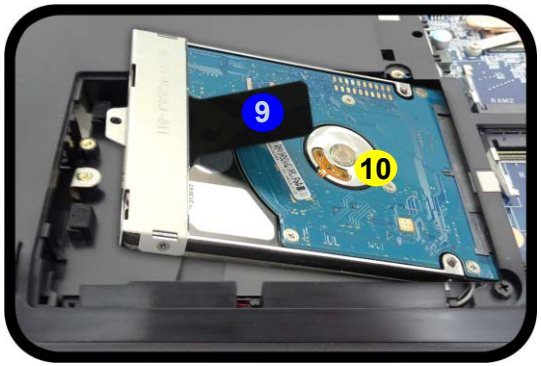

f.

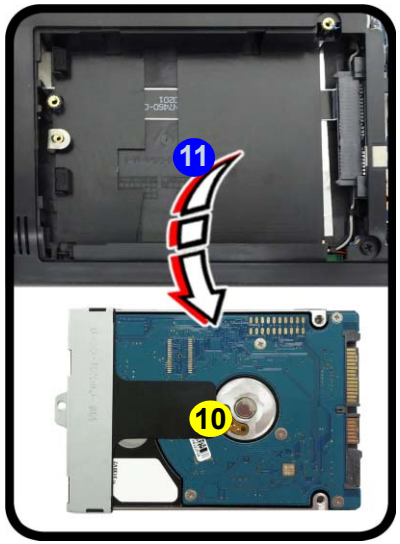

HDD System Warning

New HDD's are blank. Before you begin make sure:

You have backed up any data you want to keep from your old HDD.

You have all the CD-ROMs and FDDs required to install your operating system and programs.

If you have access to the internet, download the latest application and hardware driver updates for the operating system you plan to install. Copy these to a removable medium.

g.

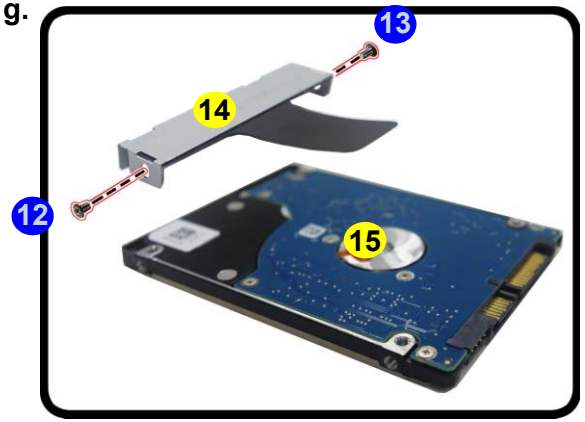

10. HDD Assembly
14. Bracket
15. HDD

- 3 Screws

Figure 4
RAM Module Removal

a. The RAM modules will be visible at point 1 on the mainboard.
b. Pull the release latches.
c. Remove the module.

Removing the System Memory (RAM)

The computer has two memory sockets for 260 pin Small Outline Dual In-line Memory Modules (SO-DIMM) supporting DDR4 3200MHz. The main memory can be expanded up to 64GB. The total memory size is automatically detected by the POST routine once you turn on your computer.

Memory Upgrade Process

1. Turn **off** the computer, turn it over to remove the battery (***page 2 - 5***) and component cover (***page 2 - 6***).
2. The RAM modules will be visible at point 1 on the mainboard (***Figure 4b***).
3. Gently pull the two release latches (2 & 3) on the sides of the memory socket in the direction indicated by the arrows (***Figure 4b***).
4. The RAM module 4 will pop-up (***Figure 4c***), and you can then remove it.

Contact Warning

Be careful not to touch the metal pins on the module's connecting edge. Even the cleanest hands have oils which can attract particles, and degrade the module's performance.

a.

b.

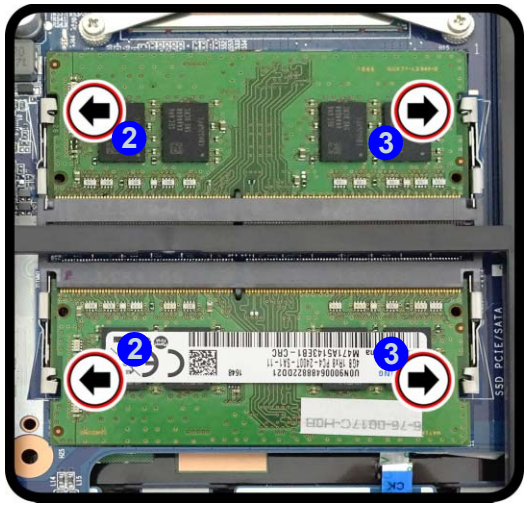

c.

4. RAM Module

Single Memory Module Installation

If your computer has a single memory module, then insert the module into the **Channel 0 (JDIMM1 / RAM1)** socket.

5. Pull the latches to release the second module if necessary.
6. Insert a new module holding it at about a 30° angle and fit the connectors firmly into the memory slot.
7. The module will only fit one way as defined by its pin alignment. Make sure the module is seated as far into the slot as it will go. DO NOT FORCE IT; it should fit without much pressure.
8. Press the module in and down towards the mainboard until the slot levers click into place to secure the module.
9. Replace the bottom case and the screws (see ***page 2 - 5***).
10. Restart the computer to allow the BIOS to register the new memory configuration as it starts up.

Figure 5
Keyboard Removal

a. Locate the release points.
b. Release the keyboard by pressing at point 3.
c. Disconnect the keyboard ribbon cable from the locking collar socket.
d. Remove the keyboard.

Removing the Keyboard

1. Turn **off** the computer, turn it over to remove the battery (***page 2 - 10***) and component cover (***page 2 - 6***).
2. Locate the release points 1 - 2 from the open bottom case (***Figure 5a***).
3. Open it up with the LCD on a flat surface before pressing at point 3 to release the keyboard module (use the specific eject stick 4 to do this) while releasing the keyboard in the direction of the arrow 5 as shown (***Figure 5b***).
4. Carefully lift the keyboard 6 up, being careful not to bend the keyboard ribbon cable 7. Disconnect the keyboard ribbon cable from the locking collar socket 8 (***Figure 5c***).
5. Carefully lift up the keyboard 6 off the computer (***Figure 5d***).
6. Reverse the process to install the keyboard (be careful not to bend the keyboard ribbon cable).

a.

b.

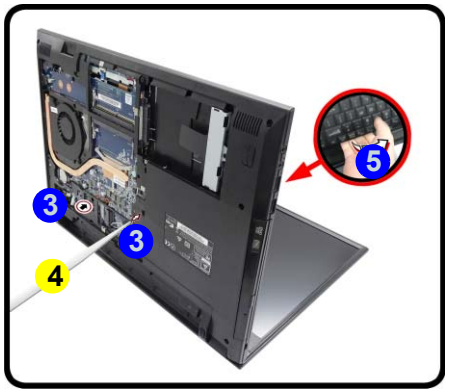

c.

c.

4. Eject Stick
6. Keyboard

Removing the Optical (CD/DVD) Device

1. Turn **off** the computer, remove the battery (*page 2 - 5*), and bottom case (*page 2 - 6*).
2. Remove the screw 1 and push the optical device 2 out of the bay in the direction of the arrow 3 (*Figure 6a*).
3. Carefully pry the bezel 5 off the optical device at point 4 (*Figure 6b*).
4. Separate the bezel 5 and the optical device (*Figure 6d*).
5. Reverse the process to attach the front bezel 5 with the new optical device at point 6 (*Figure 6d*).
6. Insert the new device and carefully slide it into the computer (the device only fits one way. DO NOT FORCE IT; The screw holes should line up). Replace the bottom cover and tighten the screws.
7. Restart the computer to allow it to automatically detect the new device.

Figure 6
Optical Device Removal

a. Remove screw and push the optical device out off the computer.
b. Pry the bezel off the optical device.
c. Separate the bezel and optical device
d. Install the front bezel.

a.

c.

b.

d.

2. Optical Device
5. Bezel Cover

- 1 Screw

Figure 7
Wireless LAN Module Removal

a. Locate the WLAN.
b. Disconnect the cable and remove the screw.
c. The WLAN module will pop up and lift it out of the computer.

Note: Make sure you reconnect the antenna cable to the "1 + 2" socket (*Figure 7b*).

5.Wireless LAN Module

- 1 Screw

Removing the Wireless LAN Module

1. Turn **off** the computer, turn it over to remove the keyboard (*page 2 - 10*) and battery (*page 2 - 5*).
2. The Wireless LAN module will be visible at point 1 on the mainboard (*Figure 7a*).
3. Carefully disconnect the cables 2 & 3, and then remove the screw 4 (*Figure 7b*)
4. The Wireless LAN module 5 (*Figure 7c*) will pop-up, and you can remove it from the computer.
5. Reverse the process to install a new module (do not forget to replace all the screws and bottom cover).

a.

b.

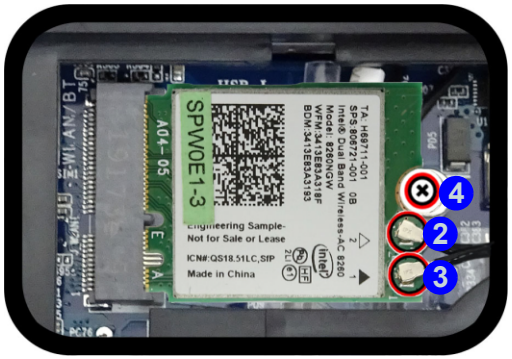

c.

Wireless LAN, and Combo Module Cables

Note that the cables for connecting to the antennae on WLAN, WLAN & Bluetooth Combo modules are not labelled. The cables/covers (each cable will have either a black or transparent cable cover) are color coded for identification as outlined in the table below.

Module Type	Antenna Type	Cable Color	Cable Cover Type
WLAN/WLAN & Bluetooth Combo	WM 1	Black	Transparent
	WM 2	Black	White
LTE Broadband	LTE 1	Black	Black
	LTE 2	Gray	Black

Cable 1 is usually connected to antenna 1 (Main) on the module, and cable 2 to antenna 2 (Aux).

Figure 8
4G Module Removal

a. Locate the WLAN.
b. Disconnect the cable and remove the screw.
c. The WLAN module will pop up and lift it out of the computer.

Removing the 4G Module

1. Turn **off** the computer, turn it over to remove the keyboard (***page 2 - 10***) and battery (***page 2 - 5***).
2. The module will be visible at point 1 on the mainboard (***Figure 7a***).
3. Carefully disconnect the cables 2 & 3, and then remove the screw 4 (***Figure 7b***)
4. The module 5 (***Figure 7c***) will pop-up, and you can remove it from the computer.
5. Reverse the process to install a new module (do not forget to replace all the screws and bottom cover).

a.

b.

c.

5.4G Module

- 1 Screw

Removing the M.2 SSD Module

1. Turn **off** the computer, turn it over to remove the keyboard (***page 2 - 10***) and battery (***page 2 - 5***).
2. The M.2 SSD module will be visible at point 1 on the mainboard (***Figure 9a***).
3. Remove the screw 2 (***Figure 9b***)
4. The M.2 SSD module 3 (***Figure 9c***) will pop-up, and you can remove it from the computer.
5. Reverse the process to install a new module (do not forget to replace all the screws and bottom cover).

Figure 9
M.2 SSD Module Removal

a. Locate the M.2 SSD.
b. Remove the screw.
c. The M.2 SSD module will pop up.

a.

b.

c.

Thermal Pad

Be sure to place the thermal pad's adhesive side down onto the mainboard surface.

3.M2 SATA Module

- 1 Screw

Figure 10
CCD Removal

a. Run your fingers around the inner frame of the LCD panel at the points indicated by the arrows.
b. Lay the computer down on a flat surface with the top case up forming a 90 degree angle. Lift the LCD front panel upwards.

Removing the CCD

1. Turn **off** the computer, turn it over to remove the keyboard (***page 2 - 10***) and battery (***page 2 - 5***).
2. Run your fingers around the inner frame of the LCD panel at the points as indicated by the arrows 1 - 3 (***Figure 10a***).
3. Lay the computer down on a flat surface with the top case up forming a 90 degree angle. Carefully lift and remove the LCD front cover 4 upwards (***Figure 10b***).

a.

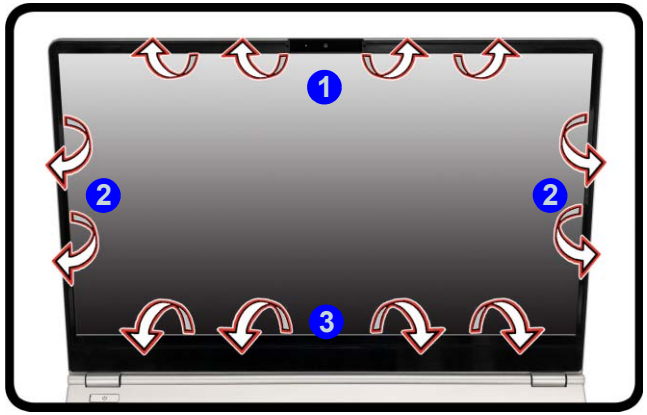

b.

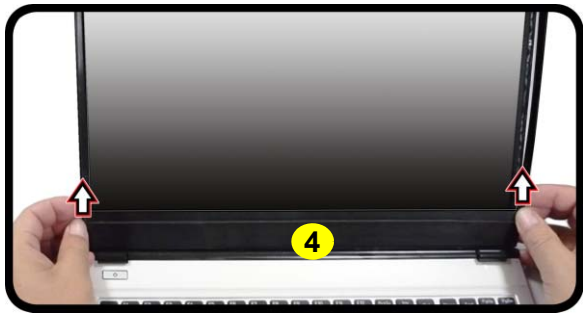

4. LCD Front Cover

•

4. Disconnect the cable 5 (*Figure 11f*).
5. Remove the CCD module 6 (*Figure 11g*).
6. Reverse the process to install a new CCD module.

Figure 11
CCD Removal (cont'd.)

c. Disconnect the cable.
d. Remove the CCD module.

c.

d.

6. CCD Module

Appendix A: Part Lists

This appendix breaks down the ***NJ50PU / NJ51PU*** series notebook's construction into a series of illustrations. The component part numbers are indicated in the tables opposite the drawings.

Note: This section indicates the *manufacturer's* part numbers. Your organization may use a different system, so be sure to cross-check any relevant documentation.

Note: Some assemblies may have parts in common (especially screws). However, the part lists DO NOT indicate the total number of duplicated parts used.

Note: Be sure to check any update notices. The parts shown in these illustrations are appropriate for the system at the time of publication. Over the product life, some parts may be improved or re-configured, resulting in *new* part numbers.

Part List Illustration Location

The following table indicates where to find the appropriate part list illustration.

Table A - 1
Part List Illustration Location

Part	
Top	*page A - 3*
Bottom	*page A - 4*
LCD	*page A - 5*
Dummy ODD	*page A - 6*
DVD	*page A - 7*
HDD	*page A - 8*
Second HDD	*page A - 9*
MB	*page A - 10*

Top

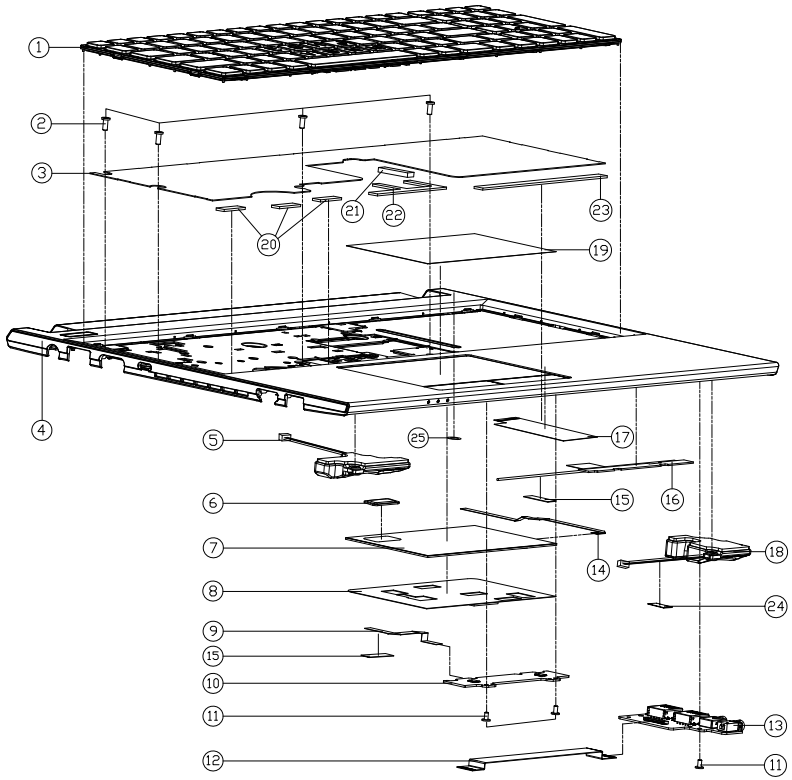

ITEM	PART NAME	PART NO	REMARK
1	KB FOR NON BL KB US SERIES NJ50CU (WIN11)	6-NJ50CU-KB1-NBL-US	
1	KB FOR MULTI 15C BL KB US SERIES NJ50CU (WIN11)	6-NJ50CU-KB1-MCL-US	
1	KB FOR NON BL KB US SERIES NJ51CU (WIN11)	6-NJ51CU-KB1-NBL-US	
1	KB FOR MULTI 15C BL KB US SERIES NJ51CU (WIN11)	6-NJ51CU-KB1-MCL-US	
1	KB JAPANESE WIND KEY CWM195GXLB-G002 NJ50JU BLACK ISOLATION (322.9MM) FOR NCJ	6-80-NJ510-210-1M	ONLY FOR NJ50PU/NJ55PU
1	KB JAPANESE WIND KEY CWM195GXLW-G002 NJ50JU WHITE SILVER LINK PRINTING ISOLATION (322.9MM) FOR NCJ	6-80-NJ510-21A-1M	ONLY FOR NJ50PU/NJ55PU
2	.SCREW M2.5*6L K BZ ICT NY	6-35-82125-6RA	
3	MYLAR (328.67*91*0.45T) (ADD 0.2T MYLAR)FOR KB NJ50CU	6-40-NJ507-011	FOR NON BL KB SERIES
4	TOP CASE MODULE (MP1) NJ50CU	6-39-NJ502-015	FOR NJ50PU(55)
4	TOP CASE MODULE (IRON HOLE) NJ51CU	6-39-NJ502-113	FOR NJ51PU(56)
5	SPK+CABLE L 53.9*29.7 2W 4? 330MM CL-22013-L (HF) NJ50PU	6-23-5NJ5P-0L1	
6	TP WD FP RUBBER (17.9*11.2*1.2T) SILICONE N150ZU	6-47-N15Z2-090	
7	TOUCH PAD ELAN SA861D-6701(108*61*0.86)MM NH500C	6-49-NH5D3-011	
8	TOUCH PAD MYLAR NJ50CU	6-40-NJ502-021	
9	FFC CABLE CLICK TO TP L=61MM 3V 4PIN (0X) NH500ED	6-43-NH500-051	
10	CLICK BOARD V2.0 NJ50PU	6-77-NJ5P2-D02	
11	.SCREW M2*3L K1 NI ICT NY (DD=Ø4.0,DT=0.8)	6-35-B1120-3RD	
12	AUDIO TO MB FFC CABLE 5V PITCH= 0.5MM L =150MM 30PIN (HT) NJ50PU	6-43-NJ5P0-010	
13	AUDIO BOARD V2.0 NJ50PU	6-77-NJ5P8-D02	
14	FFC CABLE TP TO MB L=117.5MM 3V 8PIN (0X) NJ50CU	6-43-NJ500-011-1	
15	TAPE MYLAR (C),MYLAR M550J	6-40-M55J2-030	
16	ANTENNA RFID-4.3A(LE VA) LTE-7 PCD 0.0/0.08/0.5/0.4/0.8/0.1/0.2%/2.5GHZ L=250MM VZ550DA	6-23-7W355-020	
17	TOP AL FOIL (80.9*20*0.15T) NJ50CU	6-47-NJ502-021	
18	SPK+CABLE R 38.5*40.7 2W 4? 187MM CL-22013-R (HF) NJ50PU	6-23-5NJ5P-0R1	
19	TP MYLAR NJ50CU	6-40-NJ502-030	FOR NJ50PU(55)
19	TP MYLAR (AG32) NJ51CU	6-40-NJ502-110	FOR NJ51PU(56)
20	SPONGE(20*5.5*1.2T) HDD SIDE CR-4382 PB70EF	6-47-0019A-K02	FOR NON BL KB SERIES
21	TOP CASE SPONGE(20*6*2.5) CR4382 N240JU	6-47-0019A-20Q	FOR NON BL KB SERIES
22	TOP CASE SPONGE(65.5*25*1.15T) CR-4382 NJ50CU	6-47-0019A-65L	FOR NON BL KB SERIES
23	TOP CASE SPONGE(118*6*1.15T) CR-4382 NJ50CU	6-47-0019A-B80	FOR NON BL KB SERIES
24	TOP CASE MYLAR FR83 25*7*0.05 P180HM	6-40-P1802-030	
25	WASHER Ø6*Ø3*0.15T (MYLAR,含 3M 467背膠) FOR M375E	6-37-02000-607	

Figure A - 1
Top

Bottom

Figure A - 2
Bottom

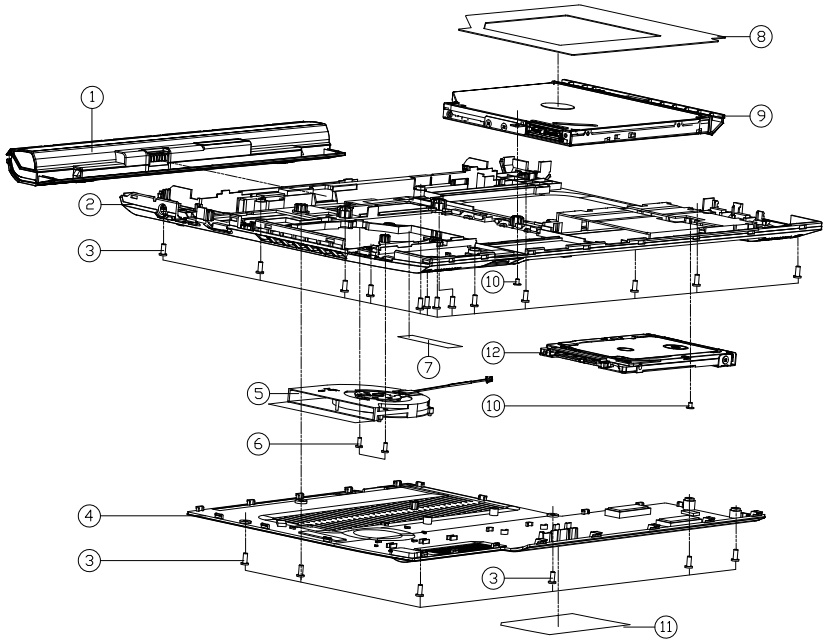

ITEM	PART NAME	PART NO	REMARK
1	BAT 18650 14.4V/225OMAH/32WH 4S2P GETAC PANASONIC (DD4025D (54129217000) (2000MAH (TEXTURE)	6-87-NJ5MS-32H01	
1	BAT 18650 14.8V/2200MAH/47WH 4S2P BMS LGC (SH356486) (0888N/50.6.0.0D) (2000MAH (TEXTURE)	6-87-NJ5MS-44D02	
1	BATP S LI 14.4V/22AH/31WH 4S2P SMP/SDI (0B3025S) 9807/0219BF (TEXTURE) (2950MAH) N750HU	6-87-N750S-31C00	
2	BOTTOM CASE MODULE NJ50CU	6-39-NJ503-014	
3	.SCREW M2.5*6L K BZ ICT NY	6-35-82125-6RA	
4	CPU COVER MODULE NJ50PU	6-42-NJ5P3-101	
5	CPU FAN MODULE(YINGFAN) PWM CONTROL (D+P2) NJ50PU	6-31-NJ5PS-101	
6	SCREW M2*5L KI(T=0.8 D=4.0) BK/Z ICT NY	6-35-B6120-5R0	
7	TAPE MYLAR (A),MYLAR M550J	6-40-M55J2-010	
8	ODD PC MYLAR 0.5T N750HU	6-40-N75H2-031	ONLY FOR 9.0MM ODD
9	W/O ODD ASS'Y NJ50CU	6-79-NJ50CU0Z-000	
9	SATA DVD SUPER MULTI 8X ASS'Y	6-79-NJ50CU0Q-001	
9	DUMMY ODD ASS'Y NJ50CU	6-79-NJ50CU0Z-001	
9	2ND HDD CADDY ASS'Y W/O HDD NJ50CU	6-79-NJ50CU0J-030	
9	2ND HDD CADDY ASS'Y W/HDD NJ50CU	6-79-NJ50CU0J-040	
10	.SCREW M2*3L KI NI ICT NY (DD=ø4.0,DT=0.8)	6-35-B1120-3RD	
11	PRODUCT LABEL FOR NJ50PU	6-45-NJ50PU03-010	
11	PRODUCT LABEL FOR NJ51PU	6-45-NJ51PU03-010	
11	PRODUCT LABEL FOR NJ55PU	6-45-NJ55PU03-010	
11	PRODUCT LABEL FOR NJ56PU	6-45-NJ56PU03-010	
12	W/O HDD ASS'Y NJ50CU	6-79-NJ50CU0J-010	
12	W/HDD ASS'Y NJ50CU	6-79-NJ50CU0J-020	

LCD

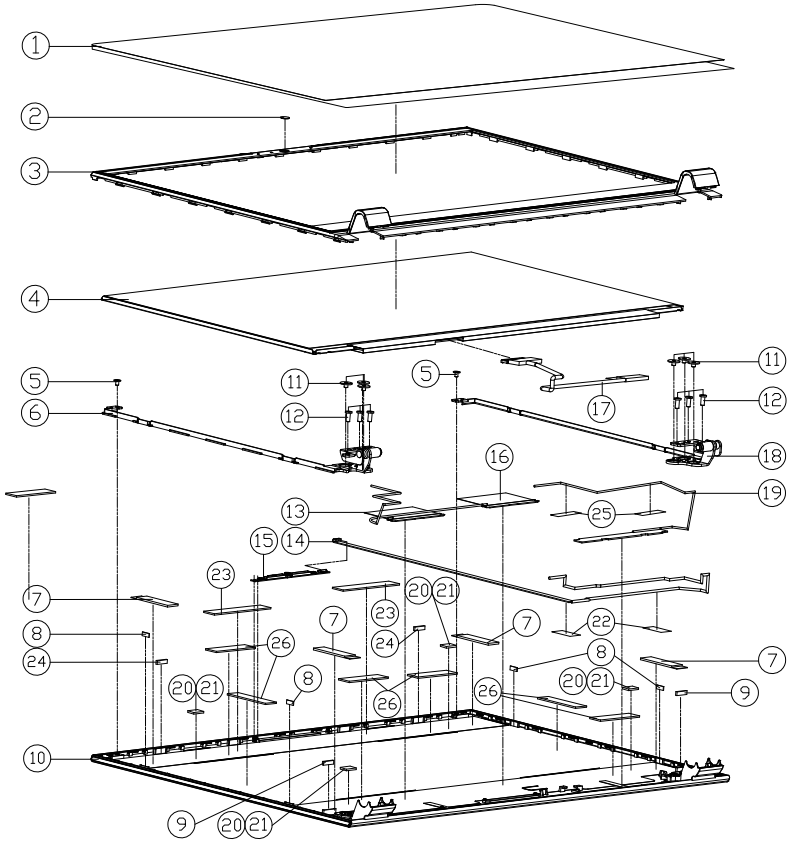

ITEM	PART NAME	PART NO	REMARK
1	LCD PROTECT MYLAR BOPP N150ZU	6-40-N15Z8-010	
2	CCD LENS PMMA (DIAMETER 3.6MM) (MP1) P970EN	6-42-P97N1-011-1	
3	LCD FRONT COVER (MP) MODULE NJ50CU	6-39-NJ501-012	
4	LCD N15.6' FHD/VVA/N7/NON GT/EDP INNOLUX N156HCE-EN1 2.8MM BACK BEZEL)	6-50-LBB26-V023	
4	LCD N15.6' HD/NON GT/EDP BOE NT156WHM-N44 (LED) 3.2MM	6-50-L8B32-Z005	
4	LCD N15.6' FHD/VVA/NA/NON GT/EDP BOE NV156FHM-N48 (FG CODE:8943/8944) 3.2MM	6-50-LBB32-Z011	
4	LCD N15.6' FHD/NON GT/EDP BOE NT156FHM-N62 3.2MM	6-50-LBB32-Z016	
5	SCREW M2*3L KI BZ ICT NY (DD=Ø4.5,DT=0.4)	6-35-B6120-3RD	
6	LCD HINGE L (MP) (SGCC+SK7) NJ50CU	6-33-NJ501-0L2	
7	LCD BACK SPONGE DOWN (30*10*0.6) (DS-10+CR4382+FM92822K) NH55EDQ	6-47-0019A-C01-1	FOR 6-50-LBB32-Z011 6-50-LBB32-Z016 6-50-LBB32-Z005
7	LCD BACK SPONGE DOWN (30*10*1.2) (DS-10+CR4382+FM92822K) NH55EDQ	6-47-0019A-C02-1	FOR 6-50-LBB26-V023
8	RUBBER (6.4*2.6*0.5T)(WHITE)NH50ED	6-47-NH501-021	
9	LCD RUBBER (9.5*2.5*1.2T) GARY P970EN	6-47-P97N1-030	
10	LCD BACK COVER (RIB MODFIY) MODULE NJ50CU	6-39-NJ501-024	
10	LCD BACK COVER (RIB MODFIY) MODULE NJ51CU	6-39-NJ501-121	
11	SCREW M2.5*2.5L KI BK/Z ICT NY(Ø8,T=0.6)	6-35-B6125-2R5	
12	.SCREW M2.5*6L K BZ ICT NY	6-35-82125-6RA	
13	ANTENNA IPEX WLAN WGT W.2 PCB BRAPLASTIC KELAYOUT 2.4G/5G W.2=150MM NJ50CU	6-23-7NJ50-021	
14	CCD CABLE L=550MM 30V 8PIN (HT) NH50ED NH50ED	6-43-NH50T-011-1	
15	VGC CAMERA CMOS(W FINGER CR0822M0250LH IR HD W/D=WIC 4M/72 DVP57K NEWN FW279 WHITE-LED	6-88-N15ZC-5102	OPTION
15	VGC CAMERA BOSH FINGER IMAGES-2M 2M FHD +IR W/D=WIC 4M/72 50M 2M BOSH FINGER WHITE-LED	6-88-N15ZC-4900	OPTION
15	VGC CAMERA BOSH FINGER IMAGES-2M 2M FHD +IR W/D=WIC 4M/72 50M 2M BOSH FINGER WHITE-LED	6-88-X17JC-4900	OPTION
16	ANTENNA IPEX WLAN WGT W.1 PCB BRAPLASTIC) 2.4G/5G W.1=250MM NJ50CU	6-23-7NJ50-010	
17	WIRE CABLE FOR EDP FHD 200MM (1 19V 30PIN (CNJ5/LV CONN.V0338-2E2) NJ50CU	6-43-NJ501-011-1N	
18	LCD HINGE R (MP) (SGCC+SK7) NJ50CU	6-33-NJ501-0R2	
19	ANTENNA IPEX WLAN WGT L.1 PCB BRAPLASTIC) 0.8G/1.9G/2.4G/5G/2.8G/5.8GHZ L.1=250MM NJ50CU	6-23-7NJ50-030	
20	GASKET 10*8*0.65T A110EU-E	6-47-00190-10P	FOR 6-50-LBB32-Z011 6-50-LBB32-Z016 6-50-LBB32-Z005
21	GASKET (10*8.5*1.5T) FOR TOP CASE P650RS	6-47-00190-1AF	ONLY FOR 6-50-LBB26-V023
22	TAPE MYLAR TRANSPARENT (20*10*0.05) P180HM	6-40-P1803-020	
23	LCD SPONGE (60*10*1.5T) SM55 P970EN	6-47-0019A-60U	ONLY FOR 6-50-LBB26-V023
24	RUBBER L10*W3.2*0.9T NB60TK1	6-47-NB601-030	
25	TAPE MYLAR TRANSPARENT (30*5*0.05) W25IHPQ	6-40-W25P3-010	
26	LCD SPONGE CR4382+DS-10 (35*13*1.5T) NJ50PU	6-47-NJ5P1-010	ONLY FOR 6-50-LBB26-V023

Figure A - 3
LCD

Dummy ODD

Figure A - 4
Dummy ODD

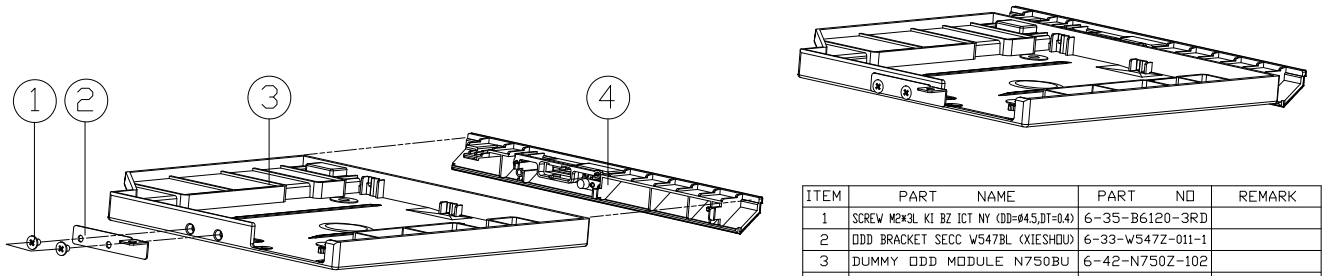

ITEM	PART NAME	PART NO	REMARK
1	SCREW M2*3L KI BZ ICT NY (DD=Ø4.5,DT=0.4)	6-35-B6120-3RD	
2	ODD BRACKET SECC W547BL (XIESHOU)	6-33-W547Z-011-1	
3	DUMMY ODD MODULE N750BU	6-42-N750Z-102	
4	ODD BEZEL MODULE NJ50CU	6-42-NJ50Z-102	

DVD

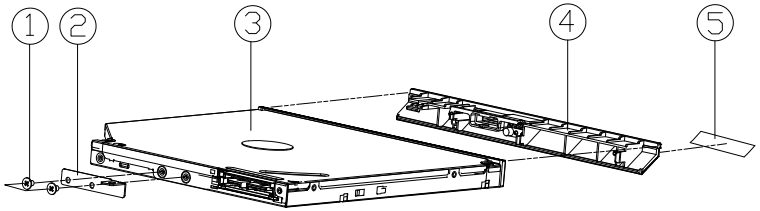

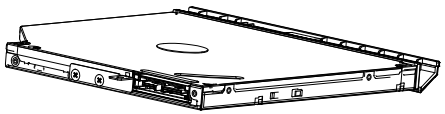

ITEM	PART NAME	PART NO	REMARK
1	SCREW M2*3L KI BZ ICT NY (DD=Ø4.5,DT=0.4)	6-35-B6120-3RD	
2	ODD BRACKET SECC W547BL (XIESHOU)	6-33-W547Z-011-1	
3	SATA DVD WRITER 5 1/4" 8X 9.0MM GUEIN HLDS	6-85-A088X-505	FOR HLDS
4	ODD BEZEL MODULE NJ50CU	6-42-NJ50Z-102	
5	SUPER MULTI ODD BEZEL LABEL N650DU	6-45-N650Q-020	

Figure A - 5
DVD

HDD

Figure A - 6
HDD

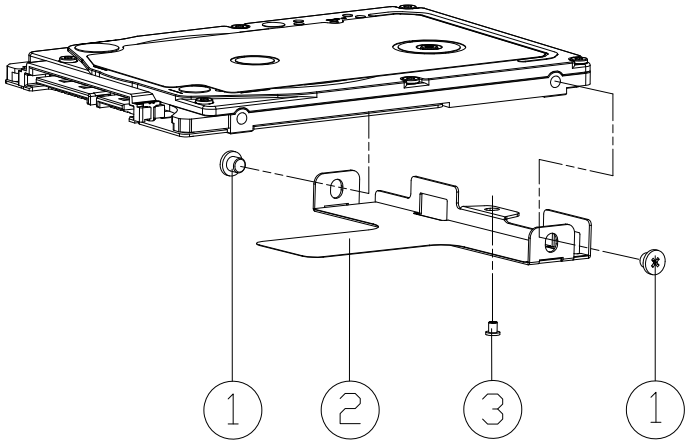

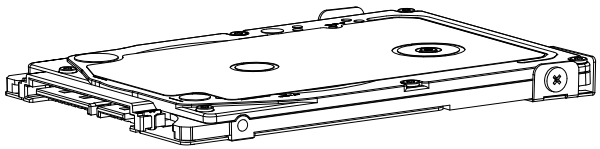

ITEM	PART NAME	PART NO	REMARK
1	SCREW M3*3.0L KI NI ICT NY	6-35-B1130-3R5	
2	HDD BKT 7MM SECC T=0.5 N250LU	6-33-N250J-011	
3	.SCREW M2*3L KI NI ICT NY (DD=Ø4.0,DT=0.8)	6-35-B1120-3RD	

Second HDD

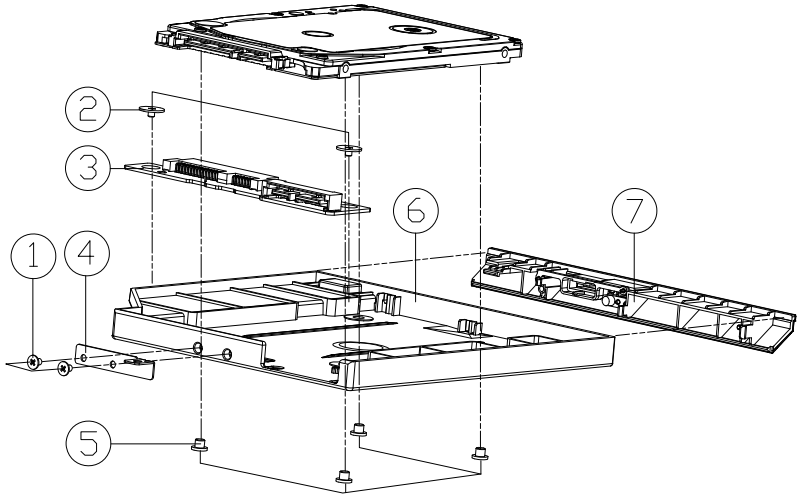

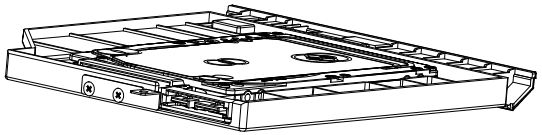

ITEM	PART NAME	PART NO	REMARK
1	SCREW M2*3L KI BZ ICT NY (DD=Ø4.5,DT=0.4)	6-35-B6120-3RD	
2	SCREW M2*2L KI BK/Z ICT NY(Ø8,T=0.6)	6-35-B6120-2RE	
3	□DD TO HDD BOARD V2.0 NJ50PU	6-77-NJ5PN-D02	
4	□DD BRACKET SECC W547BL (XIESHOU)	6-33-W547Z-011-1	W/□ HDD
4	□DD BRACKET SECC W547BL	6-33-W547Z-011	W/ HDD
5	SCREW M3*3.0L KI NI ICT NY	6-35-B1130-3R5	
6	DUMMY □DD MODULE N750BU	6-42-N750Z-102	
7	□DD BEZEL MODULE NJ50CU	6-42-NJ50Z-102	

Figure A - 7
Second HDD

MB

Figure A - 8
MB

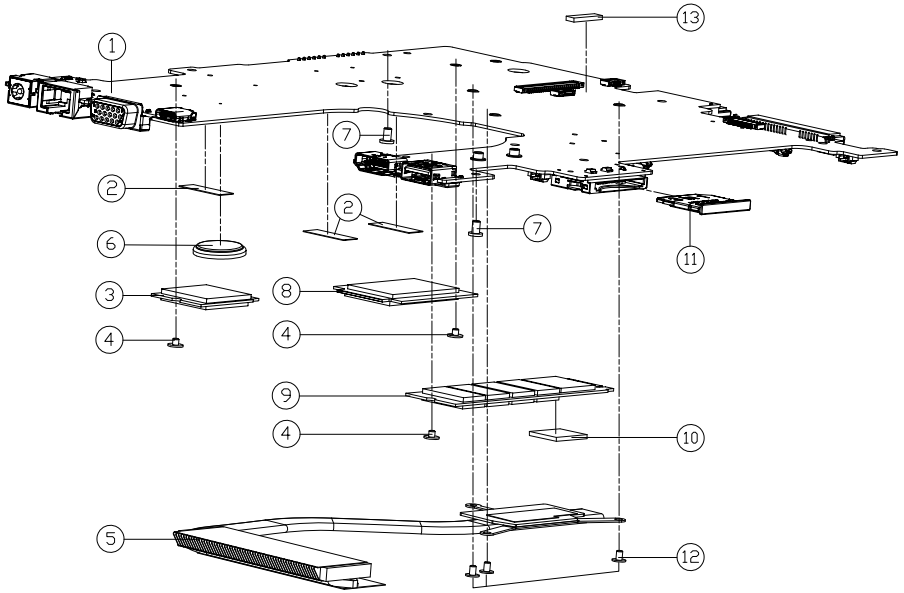

ITEM	PART NAME	PART NO	REMARK
1	MAIN BOARD(CPU/I7-1255U/1.7G) V2.0 (EDP)(W/TPM)(USB CHARGER) NJ50PU	6-77-NJ50PU00-D02-A	
1	MAIN BOARD(CPU/I5-1235U/1.3G) V2.0 (EDP)(W/TPM)(USB CHARGER) NJ50PU	6-77-NJ50PU00-D02-B	
1	MAIN BOARD(CPU/7305/1.9G) V2.0 (EDP)(W/USB CHARGER)(W/O TPM) NJ50PU	6-77-NJ50PU00-D02-2D	
1	MAIN BOARD(CPU/I3-1215U/1.2G) V2.0 (EDP)(W/O TPM)(USB CHARGER) NJ50PU	6-77-NJ50PU00-D02-3C	
2	TAPE MYLAR (C),MYLAR M550J	6-40-M55J2-030	
3	M.BOARD CORE DUAL DIMM INTEL HEATSINK FAN 2 NV40F NV40GAA0A NV40F0G0 NB-V910 2GC 8GB 128GB 512GB 2GB RZ 22B	6-88-NV40F-4210	OPTION
3	M.BOARD CORE DUAL DIMM INTEL ATTACHED FAN 1 N24GF N24GB0A NB-V910 2GC DIRECT7 NB1N24 8GB 128GB 256GB RZ 22B	6-88-N24GF-4200	OPTION
3	M.BOARD CORE DUAL DIMM INTEL VOT & C TYPEAIR FAN 2 X17KF X17KGAA0A X17KF0G0 NB-V910 2GC 8GB 512GB 512GB RZ 22B	6-88-X17KF-4210	OPTION
3	M.BOARD CORE DUAL DIMM INTEL COOLINE FAN 2 N15CF N15CGAA0A N15CF0G0 NB-V910 2GC 8GB 512GB 512GB RZ 22B	6-88-N15CF-4210	OPTION
3	M.BOARD CORE DUAL DIMM INTEL VOT & CAPRED FAN 2 X270F X270GAA0A X270F0G0 NB-V910 2GC 8GB 512GB 512GB RZ 22B CAPRA	6-88-X270F-4210	OPTION
4	SCREW M2*2L KI NI ICT NY (DD=Ø5 ,T=0.8)	6-35-B1120-2RA	
5	CPU HEATSINK MODULE NJ50PU (MP)	6-31-NJ5PN-101	
6	BATTERY 3V 220MA BBBCR2032B (KTS)	6-23-6A2B2-030	
7	SCREW M2.5*4L (D=4.6,T=0.8) KI NI ICT NY	6-35-B1125-4RA	
8	LTE 4G MODULE FIBOCOM L830-EB CAT 4 FOR EUROPE M2 CARD 6.5G DIGEPACE DEFAULT WITHOUT GPS&LONGS	6-88-NJ506-0C00	
9	SSD PCIE G4X4 M2 2280 1TB PHISON COMPANION2-E18G (EXAMPLE CODE:2280 3D TLC 96 LAYERS	6-85-D511T-H01	OPTION
9	SSD PCIE G4X4 M2 2280 2TB WD SSDPNW2-2T00 (SN810) 3D TLC 96 LAYERS	6-85-D512T-W00	OPTION
9	SSD M2 2280 512GB SAMSUNG MZVL2512HCJQ-00B00 (PM9A1) PCIE G4X4 3D TLC 128 LAYERS	6-85-D515B-S0C	OPTION
9	SSD M2 2280 1TB SAMSUNG MZVL41T0HBLB-F00B1 (PM9B1A) PCIE G4X4 3D TLC 96 LAYERS	6-85-D511T-S04	OPTION
9	SSD M2 2280 1TB WD SDBPNTY-1T00 (SN730) PCIE G3X4 3D TLC 96 LAYERS	6-85-D511T-W01	OPTION
9	SSD M2 2280 512GB SAMSUNG MZVL2512HCJQ-00B00 (PM9A1) PCIE G3X4 3D TLC 96 LAYERS	6-85-D515B-S0A	OPTION
10	THERMAL PAD 20*20*2.75MM (MA500) N170SD	6-48-N1708-010	
11	DUMMY 30NO NON PUSH TYPE PC+ABS (C7230P-70D3E) W9706UW	6-42-W9708-030	
12	SCREW M2*3L KI NI ICT NY (DD=Ø4.0,DT=0.8)	6-35-B1120-3RD	
13	SPONGE (20*4.5*2.5T)FOR BOTTOM CASE W330SU	6-47-0019A-02A	

Appendix B: Schematic Diagrams

This appendix has circuit diagrams of the ***NJ50PU / NJ51PU*** notebook's PCB's. The following table indicates where to find the appropriate schematic diagram.

Table B - 1
SCHEMATIC DIAGRAMS

Diagram - Page	Diagram - Page	Diagram - Page
System Block Diagram - Page B - 2	*DP to VGA IT6516 - Page B - 20*	*MP2964 Controller - Page B - 38*
Processor 1/13 - Page B - 3	*RGB KB - Page B - 21*	*VCore - Page B - 39*
Processor 2/13 - Page B - 4	*TPM, PW Button, LID SW, LED - Page B - 22*	*VCCGT - Page B - 40*
Processor 3/13 - Page B - 5	*Type-C - Page B - 23*	*VCCIN - Page B - 41*
Processor 4/13 - Page B - 6	*PD Controller IT8851 - Page B - 24*	*Charger - Page B - 42*
Processor 5/13 - Page B - 7	*M Key PCIE SSD - Page B - 25*	*AC IN - Page B - 43*
Processor 6/13 - Page B - 8	*USB, HDD, ODD - Page B - 26*	*Audio Board - Page B - 44*
Processor 7/13 - Page B - 9	*LAN I219V - Page B - 27*	*Audio Board - Page B - 45*
Processor 8/13 - Page B - 10	*Card Reader OZ711 - Page B - 28*	*Click Board - Page B - 46*
Processor 9/13 - Page B - 11	*M.2 Card (3G/LTE) - Page B - 29*	*ODD to HDD Caddy - Page B - 47*
Processor 10/13 - Page B - 12	*M.2 Card (BT/WLAN) - Page B - 30*	*LID SW Board - Page B - 48*
Processor 11/13 - Page B - 13	*Audio Codec - Page B - 31*	*Power Seq. - Page B - 49*
Processor 12/13 - Page B - 14	*CONN FAN, TP, CCD, LED - Page B - 32*	
Processor 13/13 - Page B - 15	*KBC ITE IT5570 - Page B - 33*	
DDR4 SO_DIMM_A - Page B - 16	*VDD3 / VDD5 - Page B - 34*	
DDR4 SO_DIMM_B - Page B - 17	*3.3V, 5V, 3VS, 5VS, CTL - Page B - 35*	
Panel, Inverter - Page B - 18	*2.5V, VCCST, VCCSTG - Page B - 36*	
HDMI - Page B - 19	*VDDQ, VDDQ_VTT, 1.8VA - Page B - 37*	

Version Note

The schematic diagrams in this chapter are based upon version 6--7P-NJ5P5-002. If your mainboard (or other boards) are a later version, please check with the Service Center for updated diagrams (if required).

System Block Diagram

Sheet 1 of 48
System Block Diagram

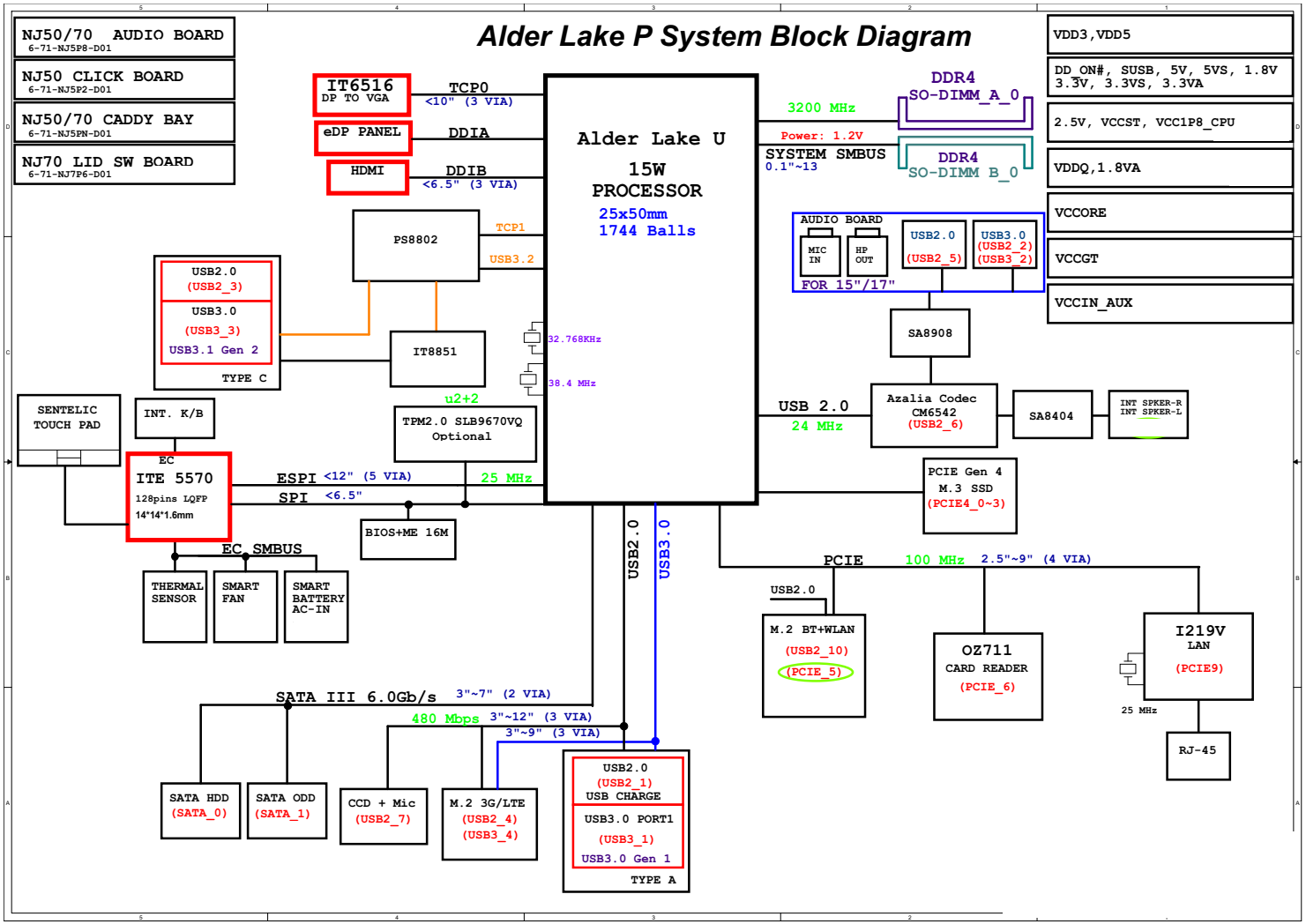

Processor 1/13

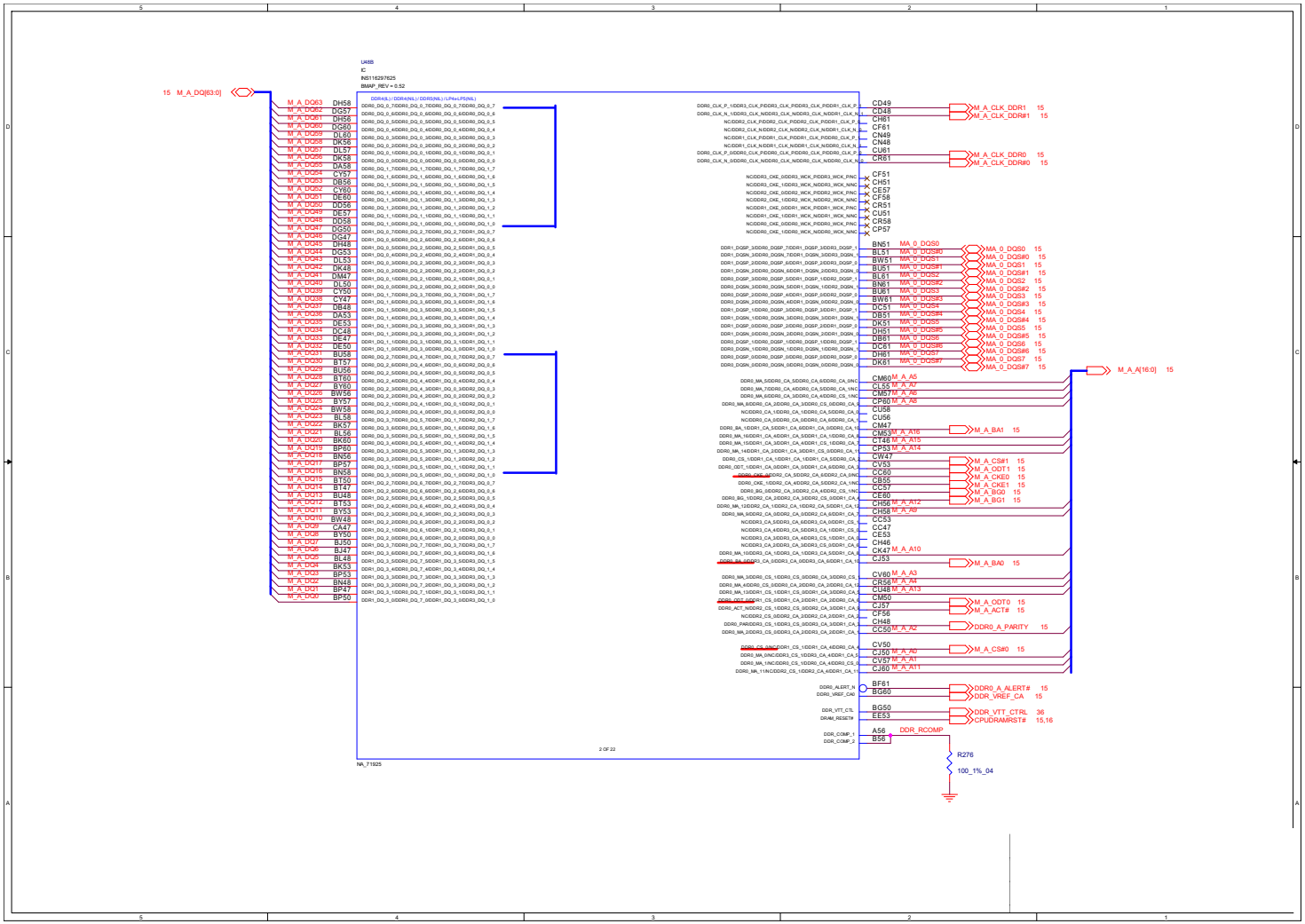

Sheet 2 of 48
Processor 1/13

Processor 2/13

Sheet 3 of 48
Processor 2/13

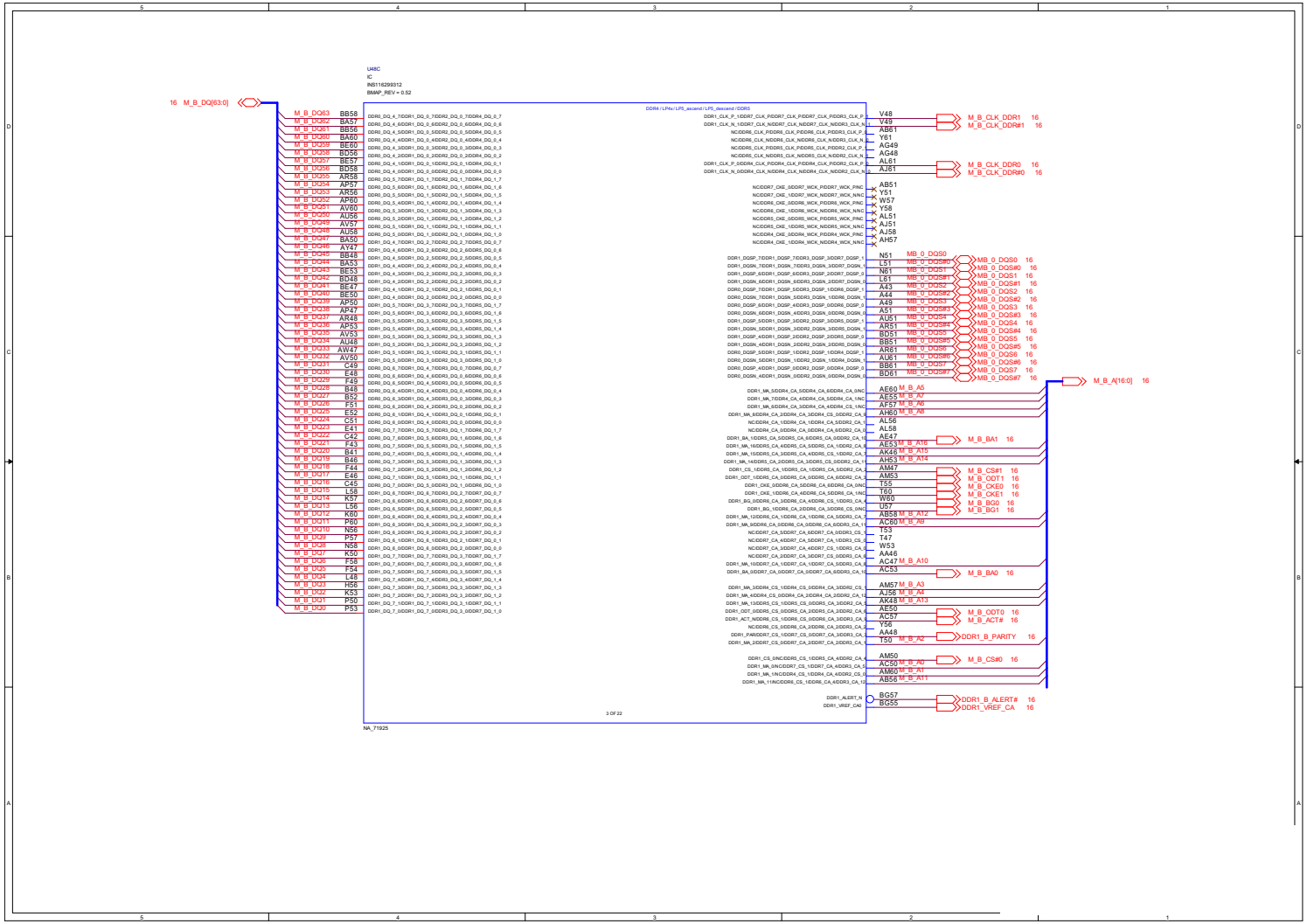

Processor 3/13

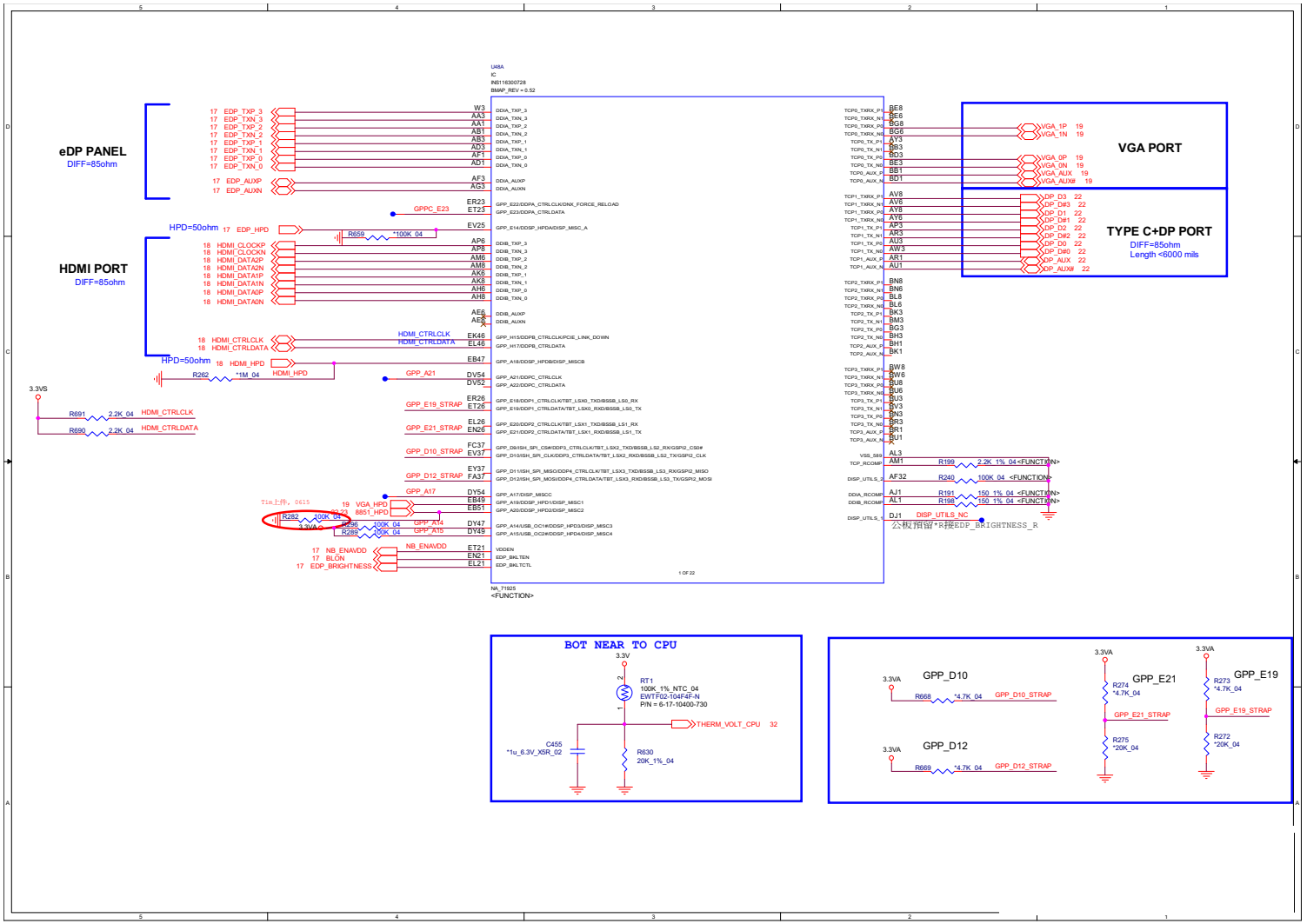

Sheet 4 of 48
Processor 3/13

Processor 4/13

Sheet 5 of 48
Processor 4/13

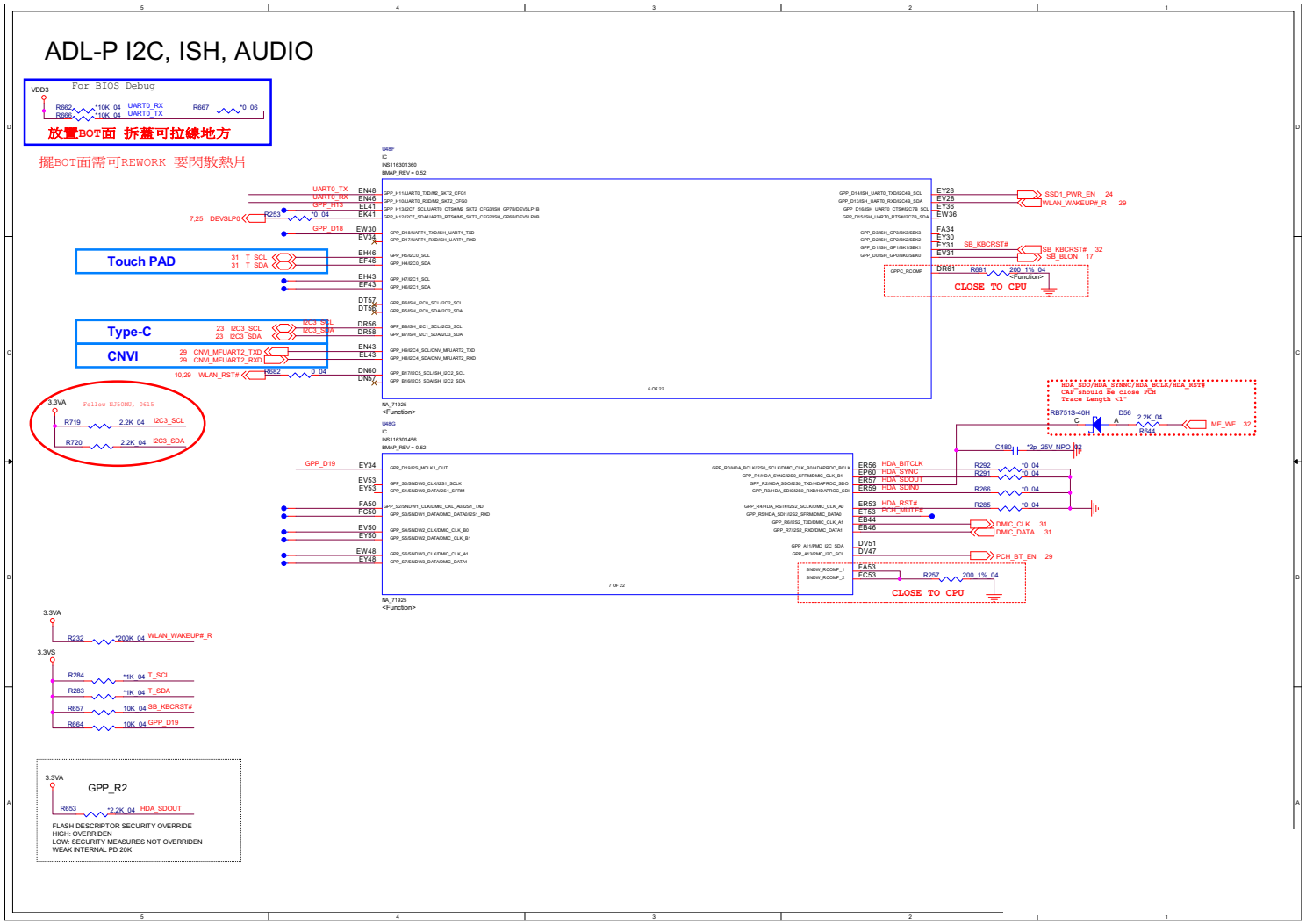

Processor 5/13

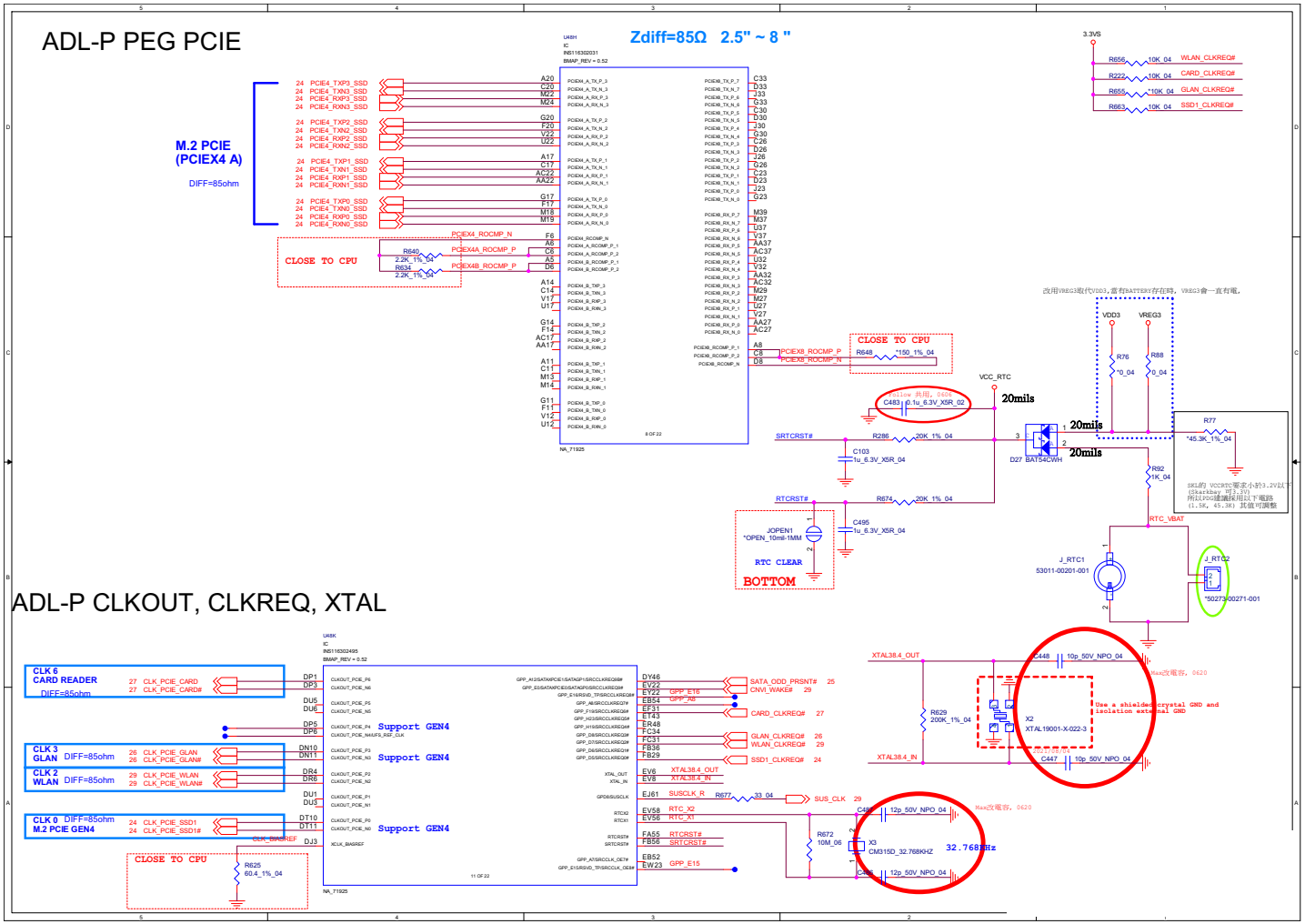

Sheet 6 of 48
Processor 5/13

Processor 6/13

Sheet 7 of 48
Processor 6/13

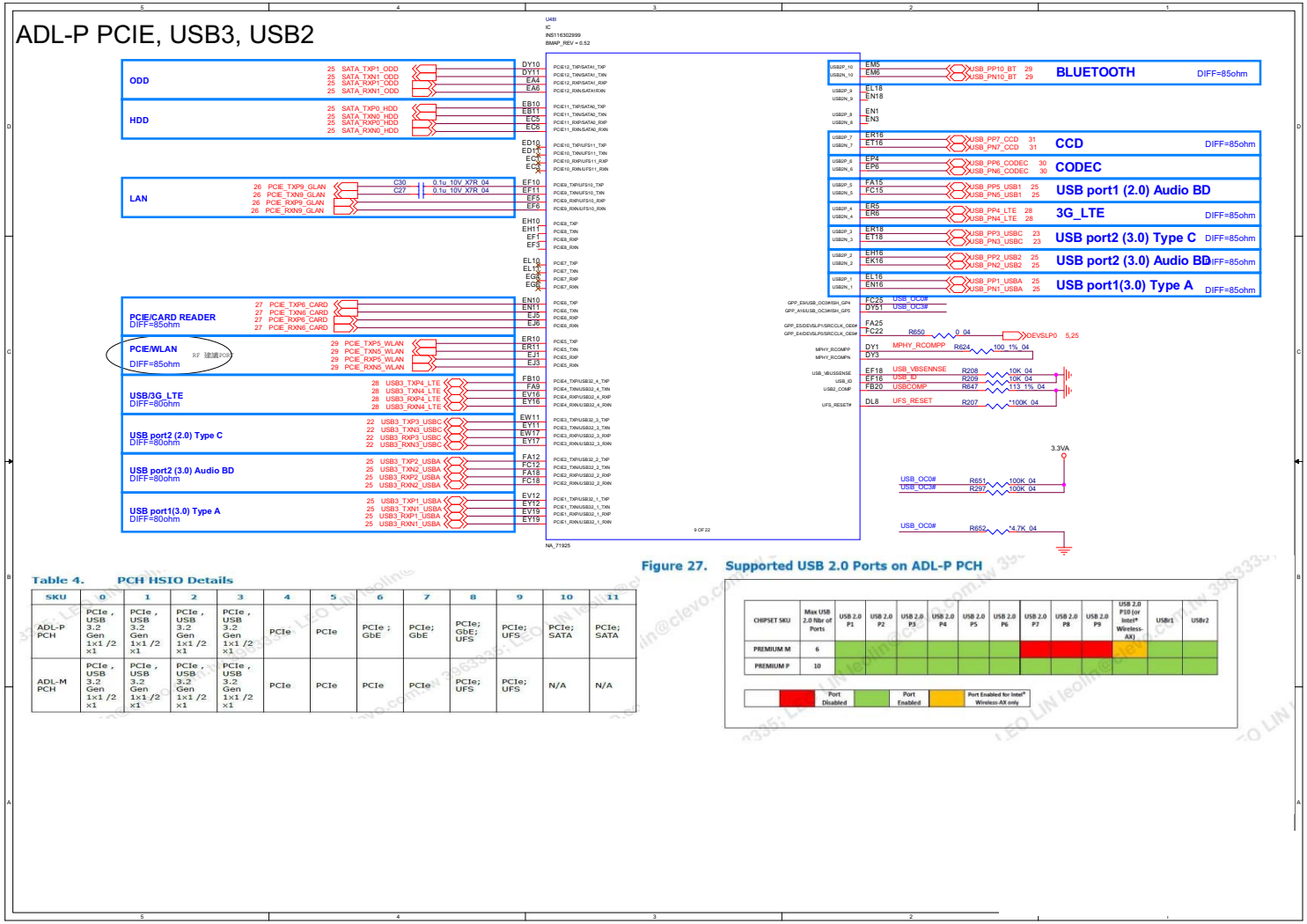

Table 4. PCH HSIO Details

SKU	0	1	2	3	4	5	6	7	8	9	10	11
ADL-P PCH	PCIe , USB 3.2 Gen 1x1 /2 x1	PCIe , USB 3.2 Gen 1x1 /2 x1	PCIe , USB 3.2 Gen 1x1 /2 x1	PCIe , USB 3.2 Gen 1x1 /2 x1	PCIe	PCIe	PCIe ; GbE	PCIe; GbE	PCIe; UFS	PCIe; UFS	PCIe; SATA	PCIe; SATA
ADL-M PCH	PCIe , USB 3.2 Gen 1x1 /2 x1	PCIe , USB 3.2 Gen 1x1 /2 x1	PCIe , USB 3.2 Gen 1x1 /2 x1	PCIe , USB 3.2 Gen 1x1 /2 x1	PCIe	PCIe	PCIe	PCIe	PCIe; UFS	PCIe; UFS	N/A	N/A

Figure 27. Supported USB 2.0 Ports on ADL-P PCH

CHIPSET SKU	Max USB 2.0 Nbr of Ports	USB 2.0 P1	USB 2.0 P2	USB 2.0 P3	USB 2.0 P4	USB 2.0 P5	USB 2.0 P6	USB 2.0 P7	USB 2.0 P8	USB 2.0 P9	USB 2.0 P10 (or Intel® Wireless-AX)	USBr1	USBr2
PREMIUM M	6												
PREMIUM P	10												

Port Disabled | Port Enabled | Port Enabled for Intel® Wireless-AX only

Processor 7/13

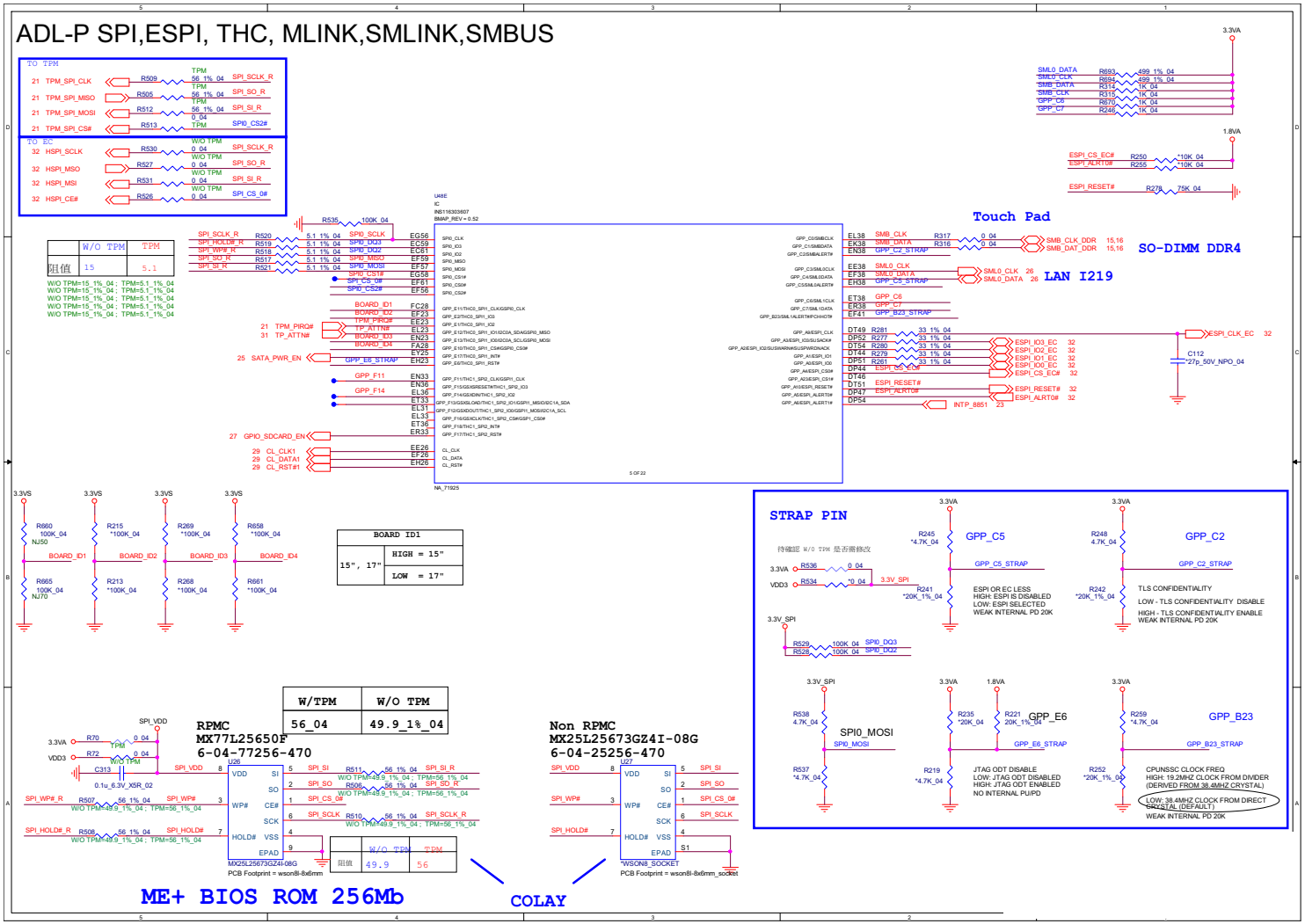

Sheet 8 of 48
Processor 7/13

Processor 8/13

Sheet 9 of 48
Processor 8/13

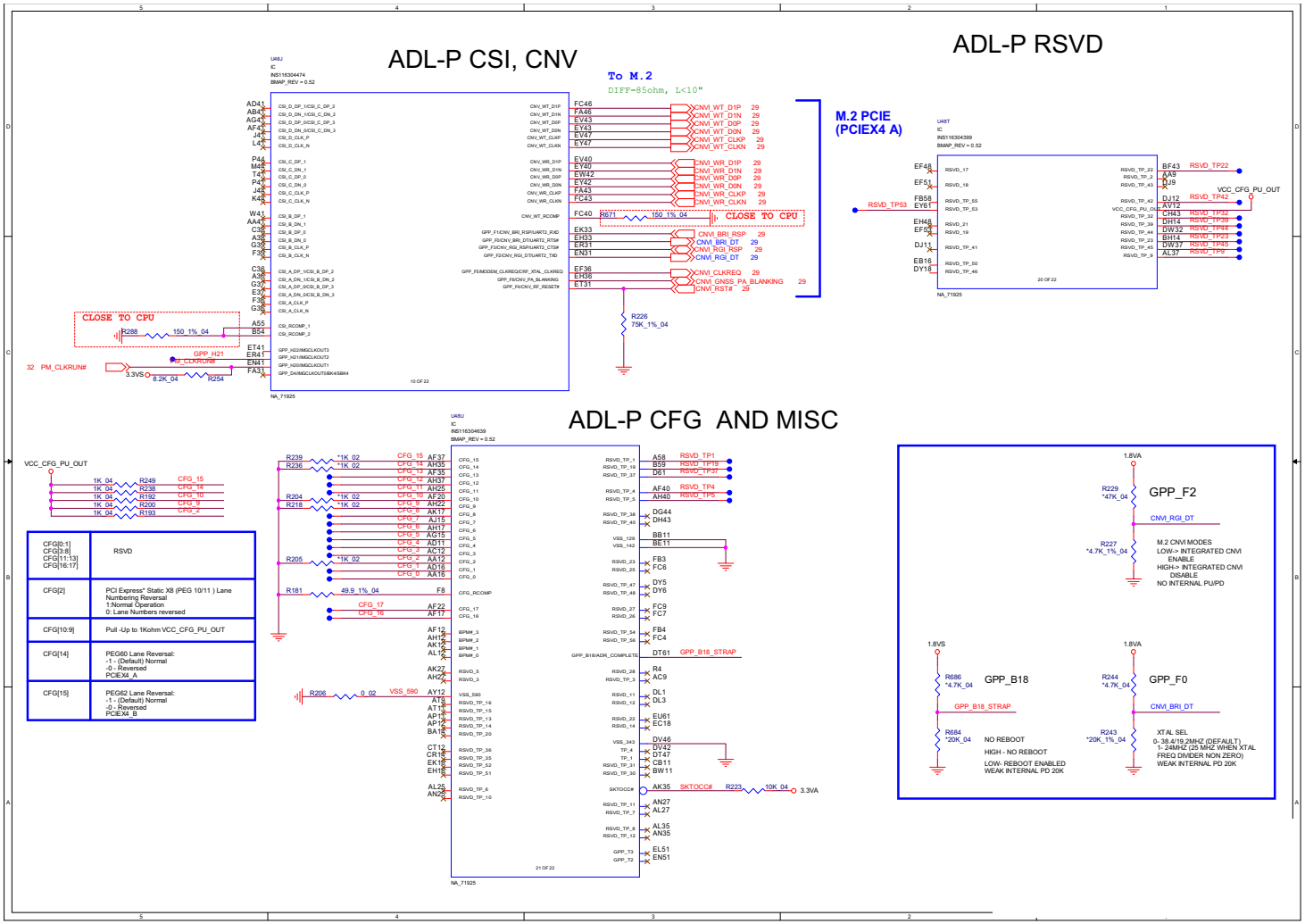

Processor 9/13

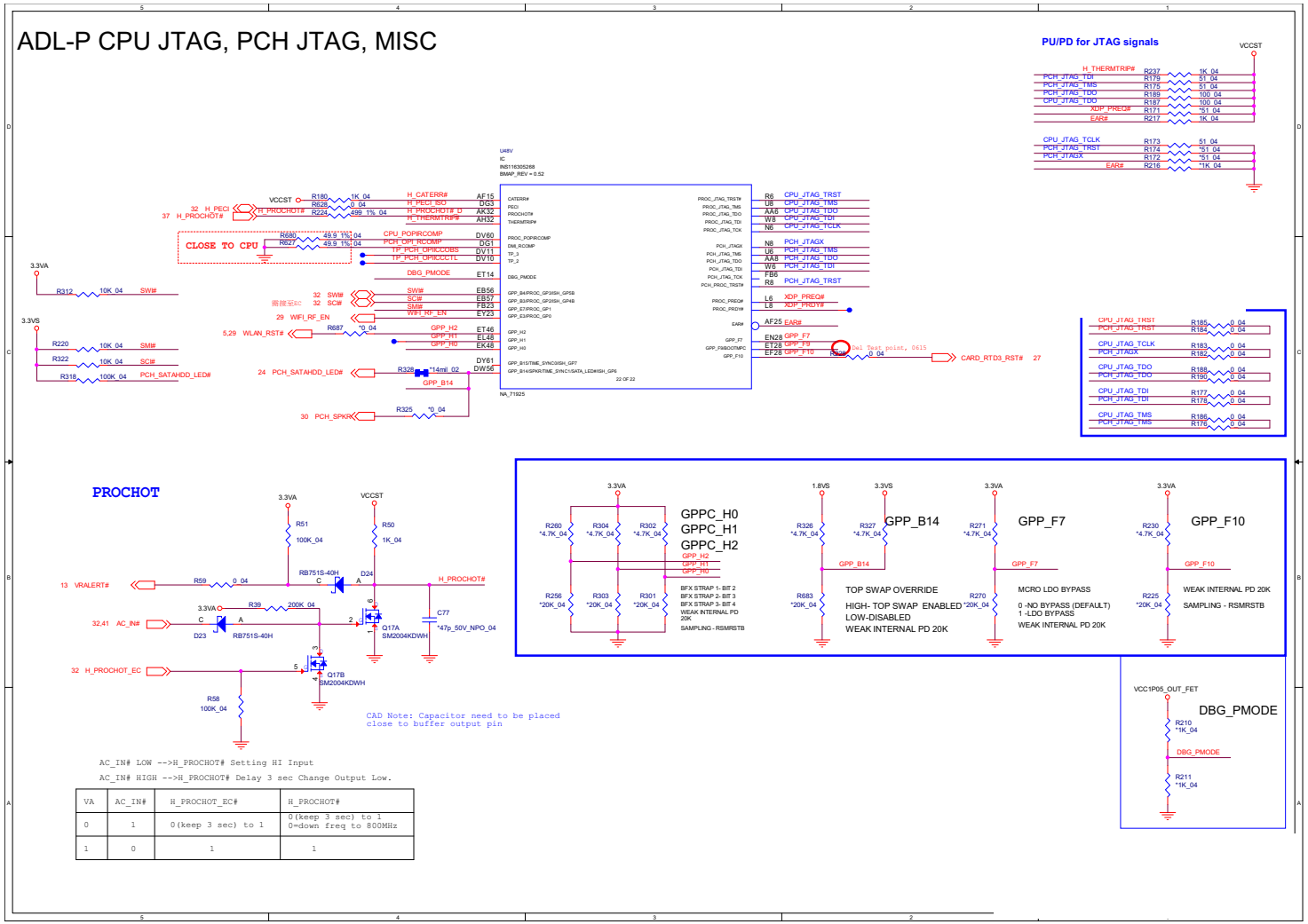

VA	AC_IN#	H_PROCHOT_EC#	H_PROCHOT#
0	1	0(keep 3 sec) to 1	0(keep 3 sec) to 1 0=down freq to 800MHz
1	0	1	1

Sheet 10 of 48
Processor 9/13

Processor 10/13

Sheet 11 of 48
Processor 10/13

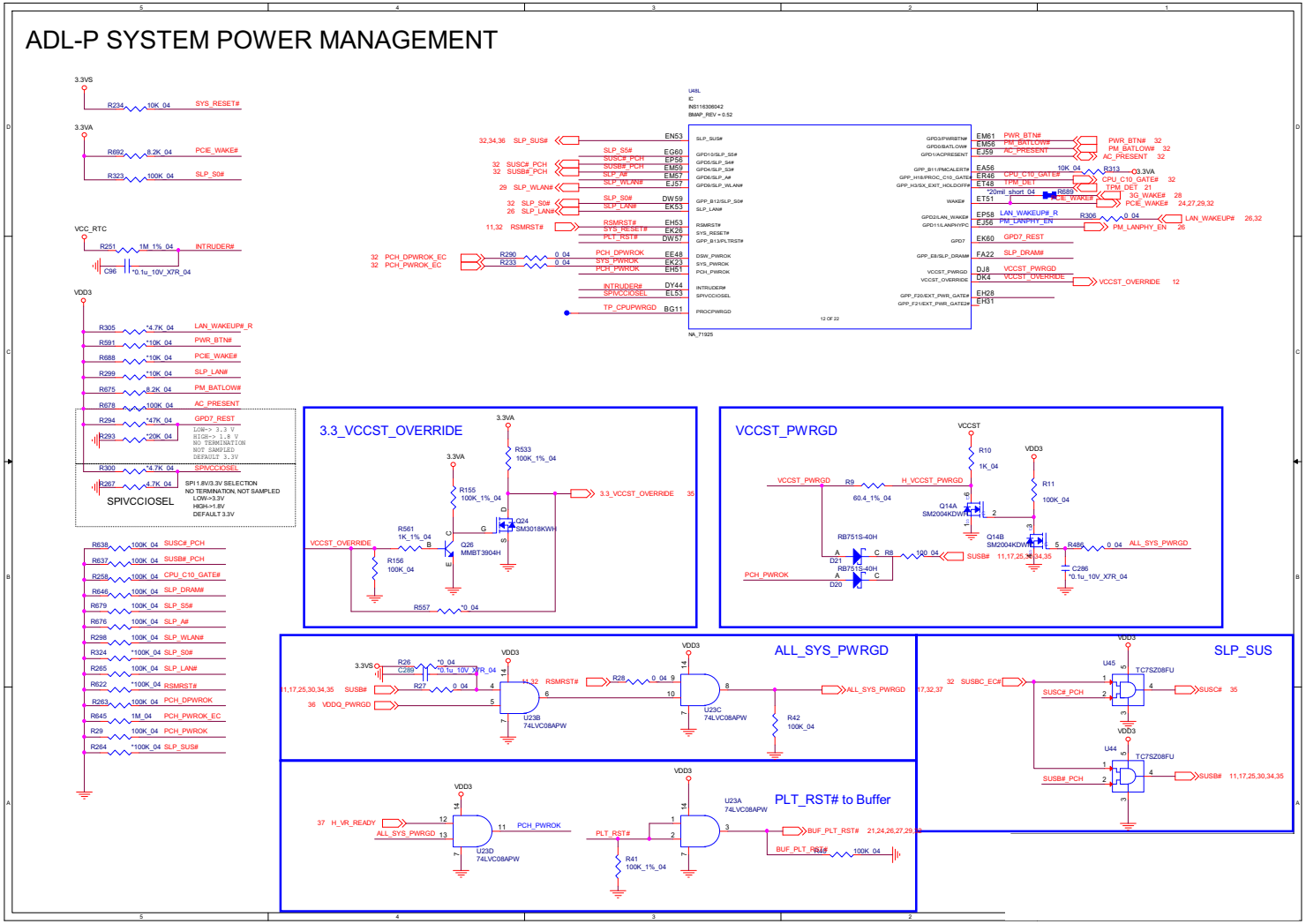

Processor 11/13

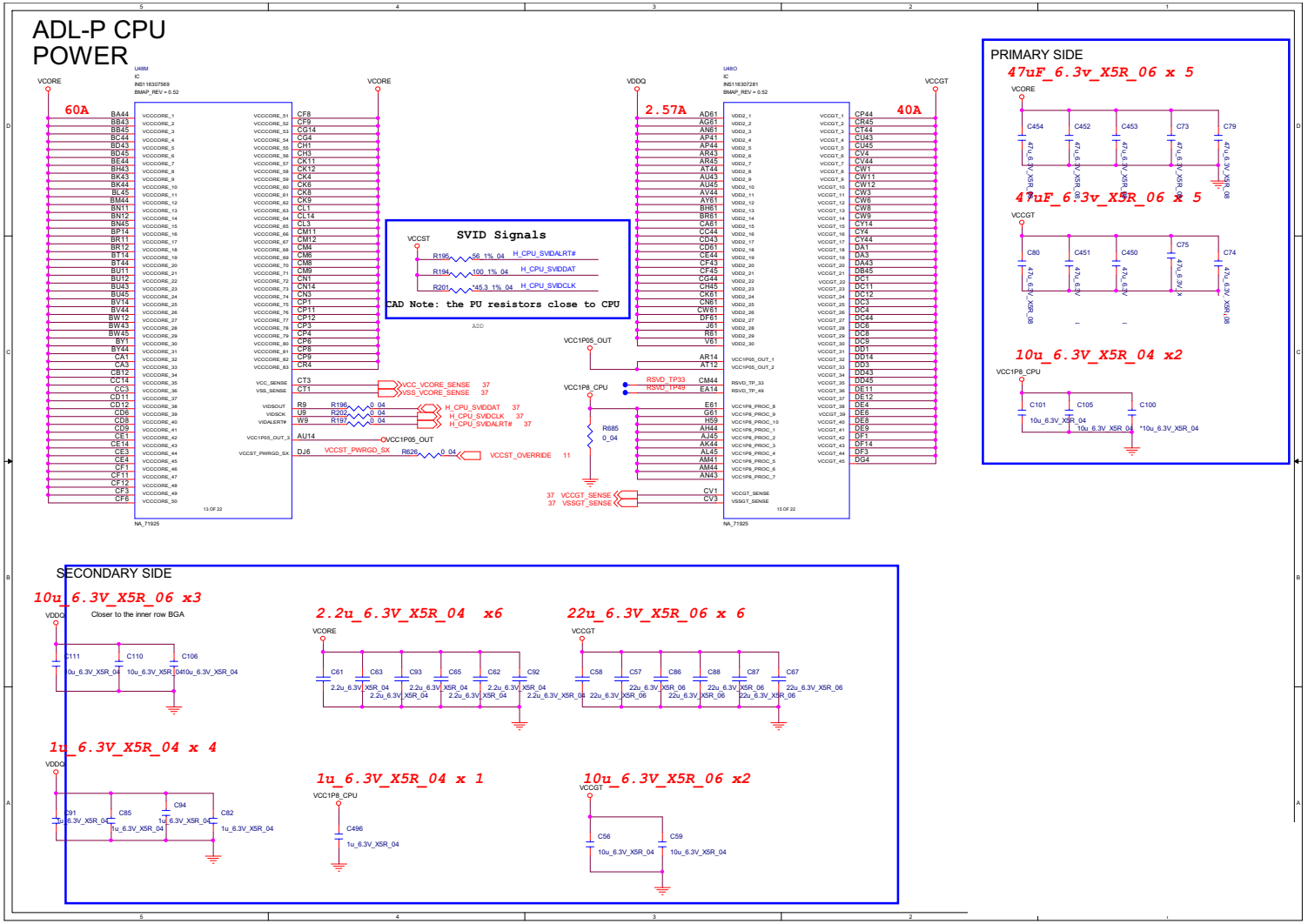

Sheet 12 of 48
Processor 11/13

Processor 12/13

Sheet 13 of 48
Processor 12/13

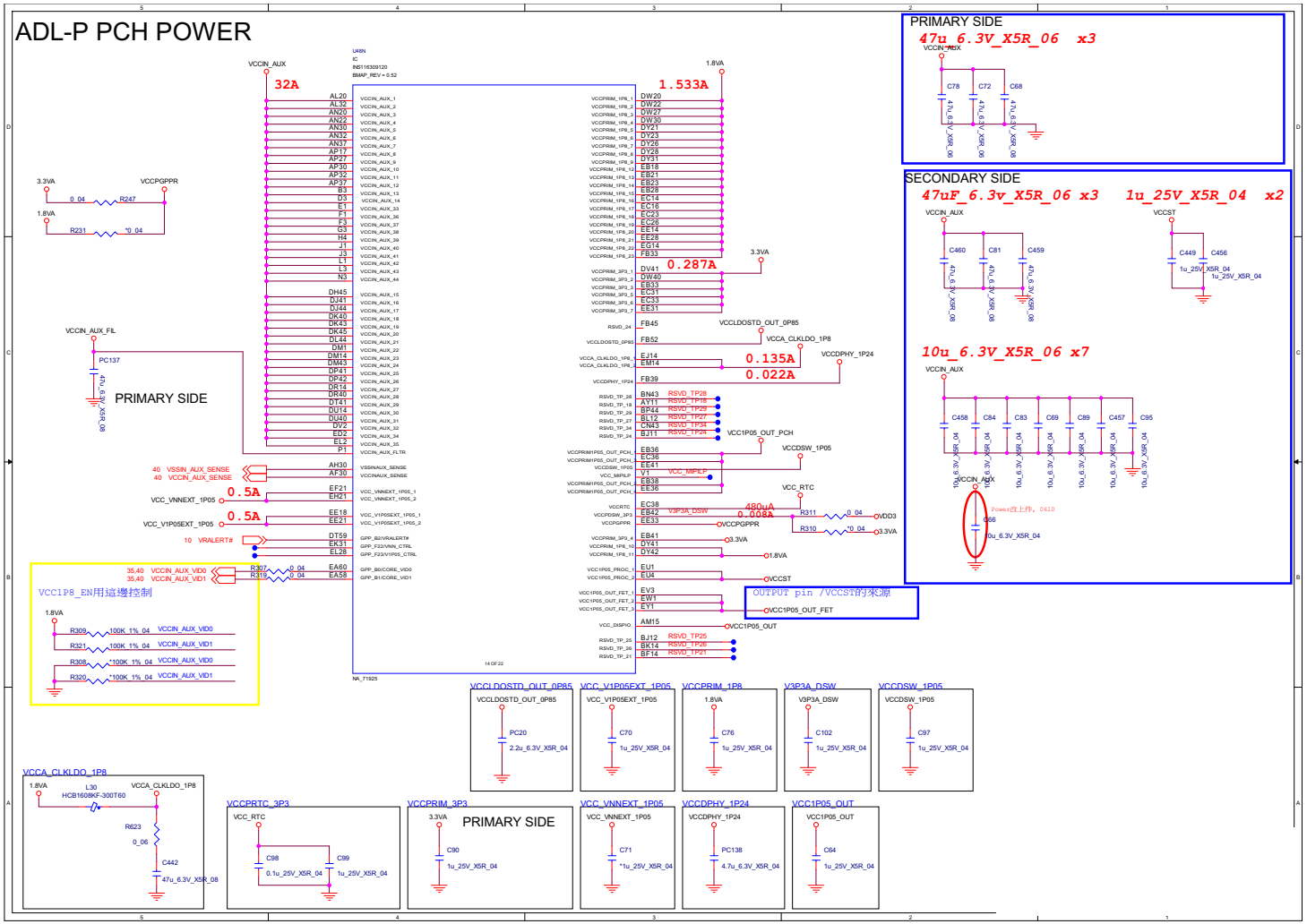

Processor 13/13

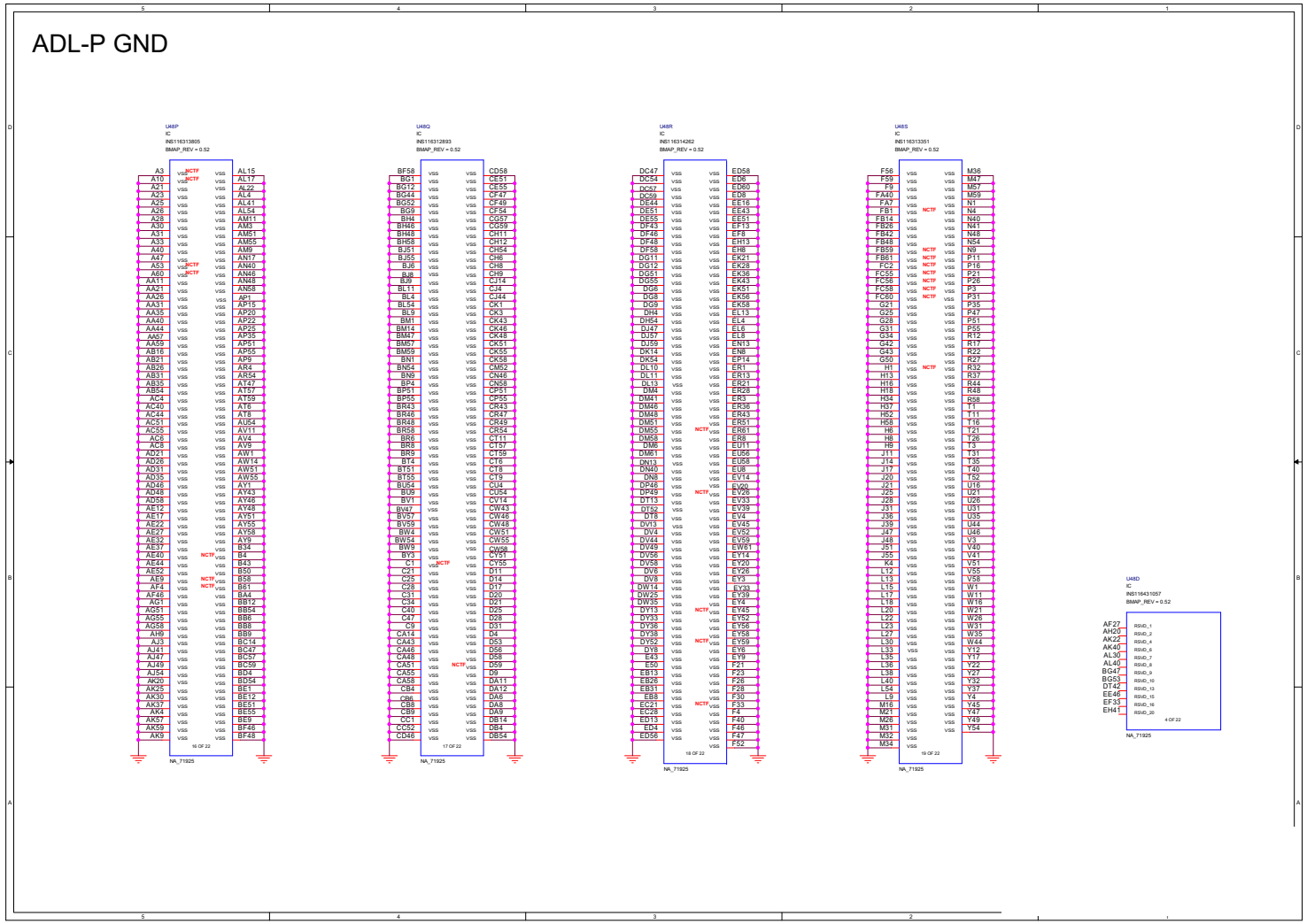

Sheet 14 of 48
Processor 13/13

DDR4 SO_DIMM_A

Sheet 15 of 48
DDR4 SO-DIMM_A

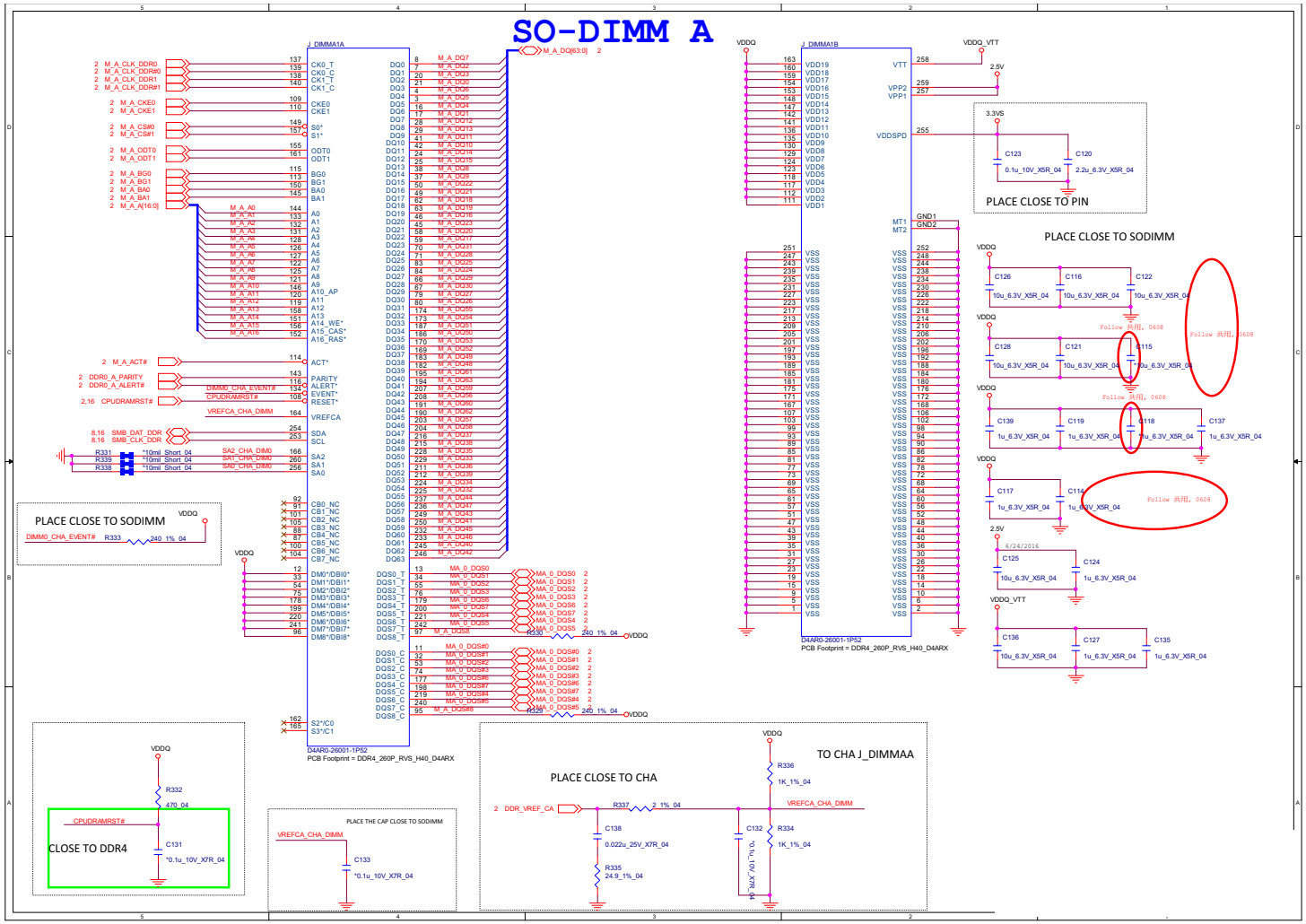

DDR4 SO_DIMM_B

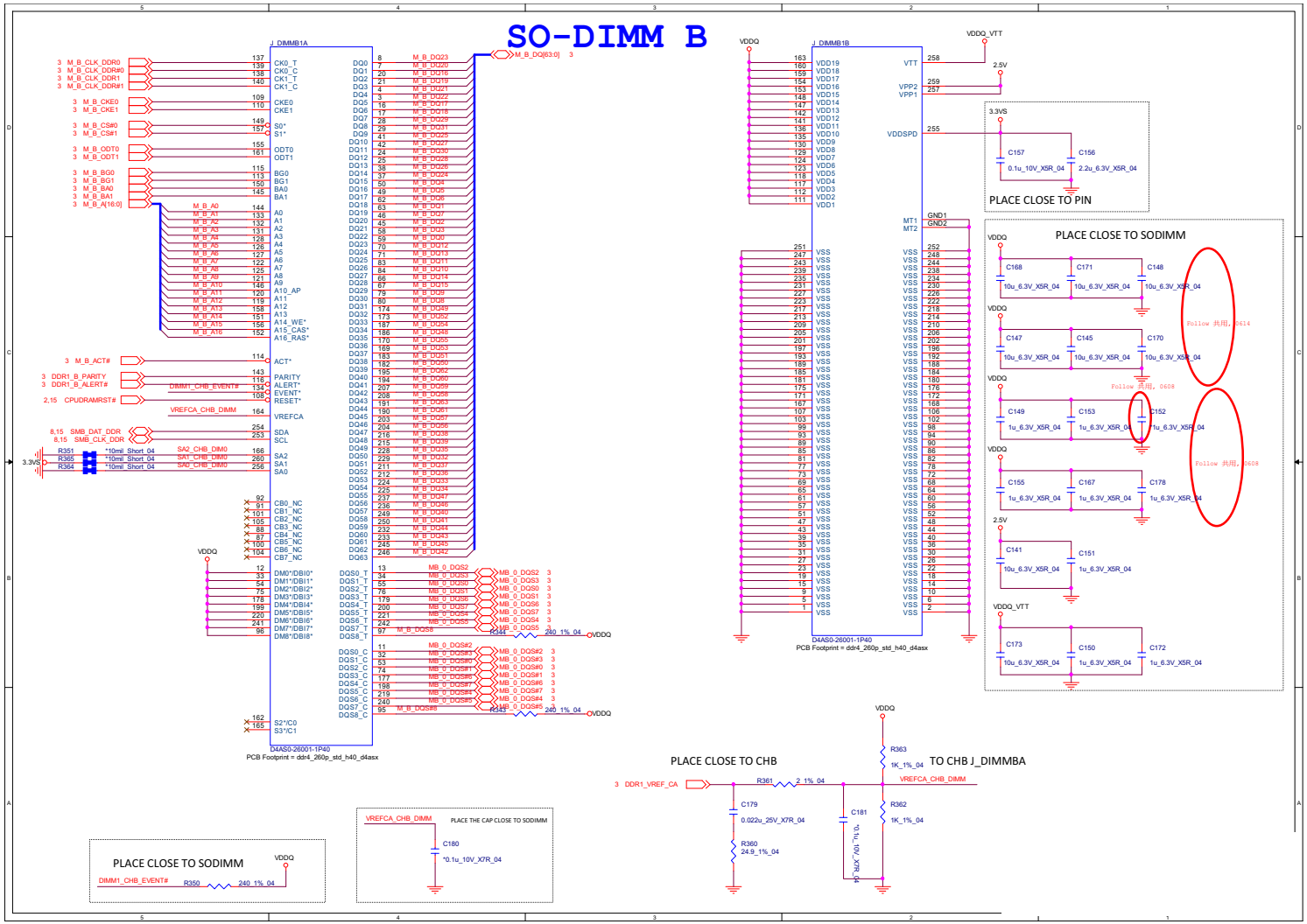

Sheet 16 of 48
DDR4 SO-DIMM_B

Panel, Inverter

Sheet 17 of 48
Panel, Inverter

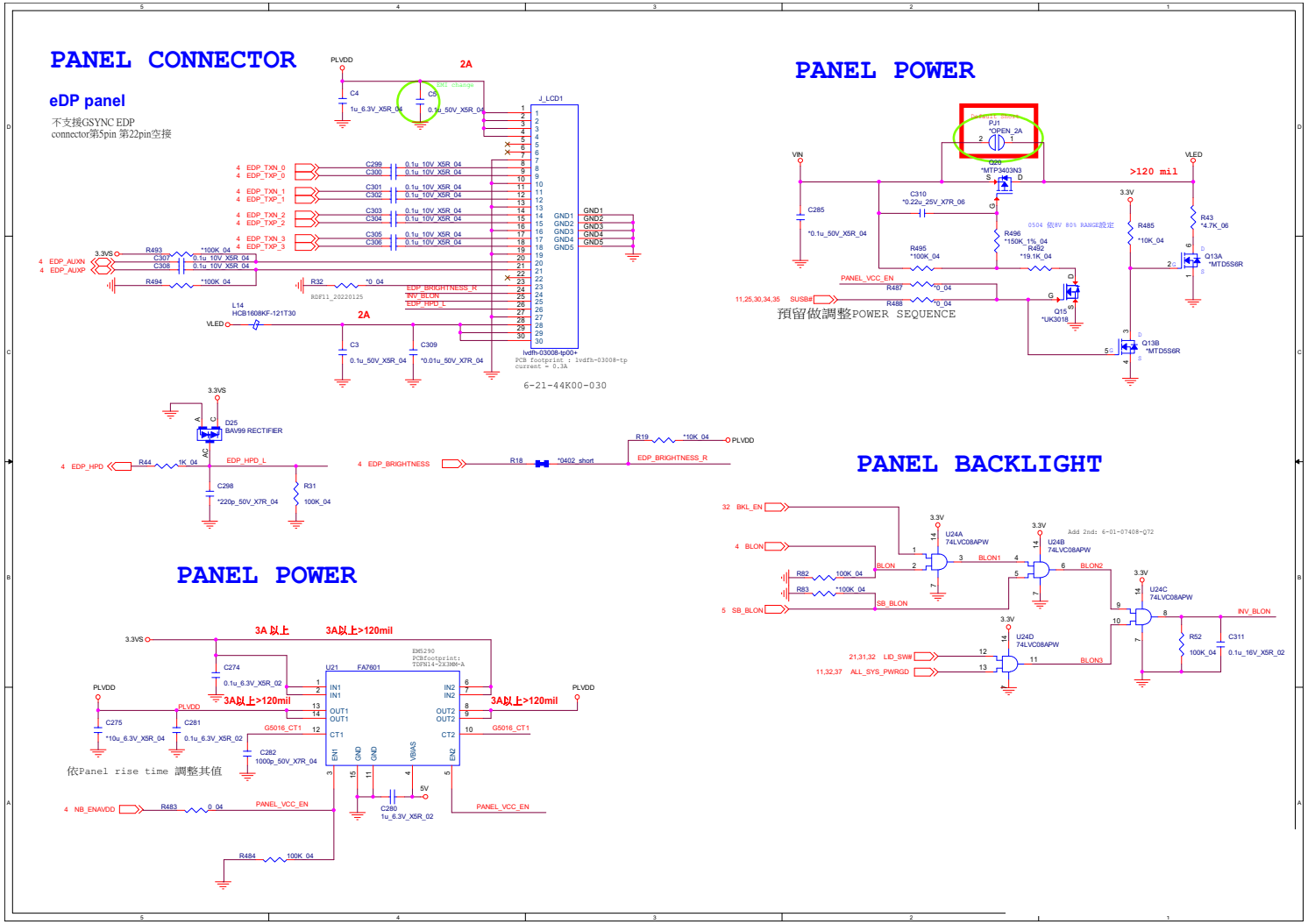

HDMI

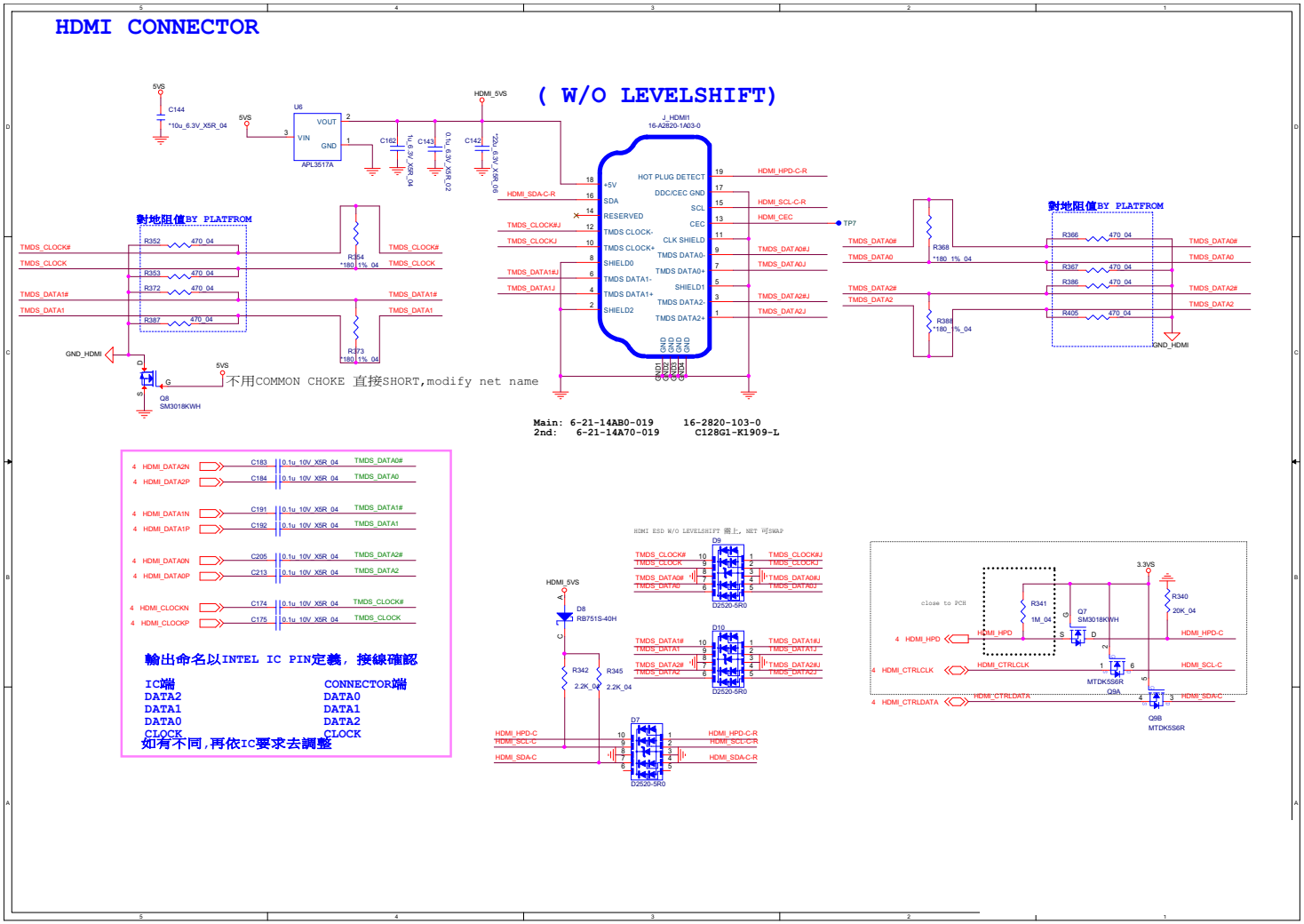

Sheet 18 of 48
HDMI

DP to VGA IT6516

Sheet 19 of 48
DP to VGA IT6516

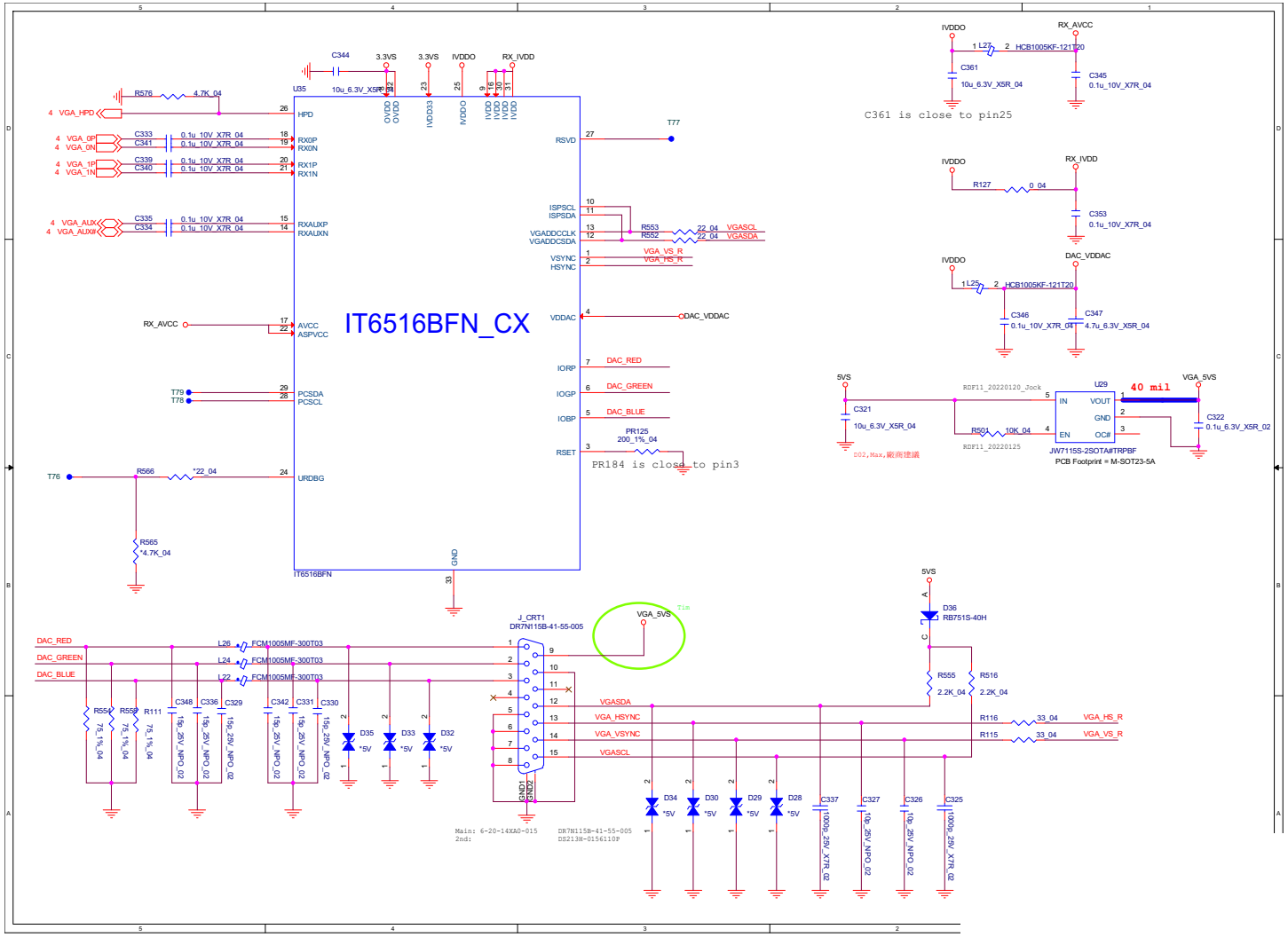

RGB KB

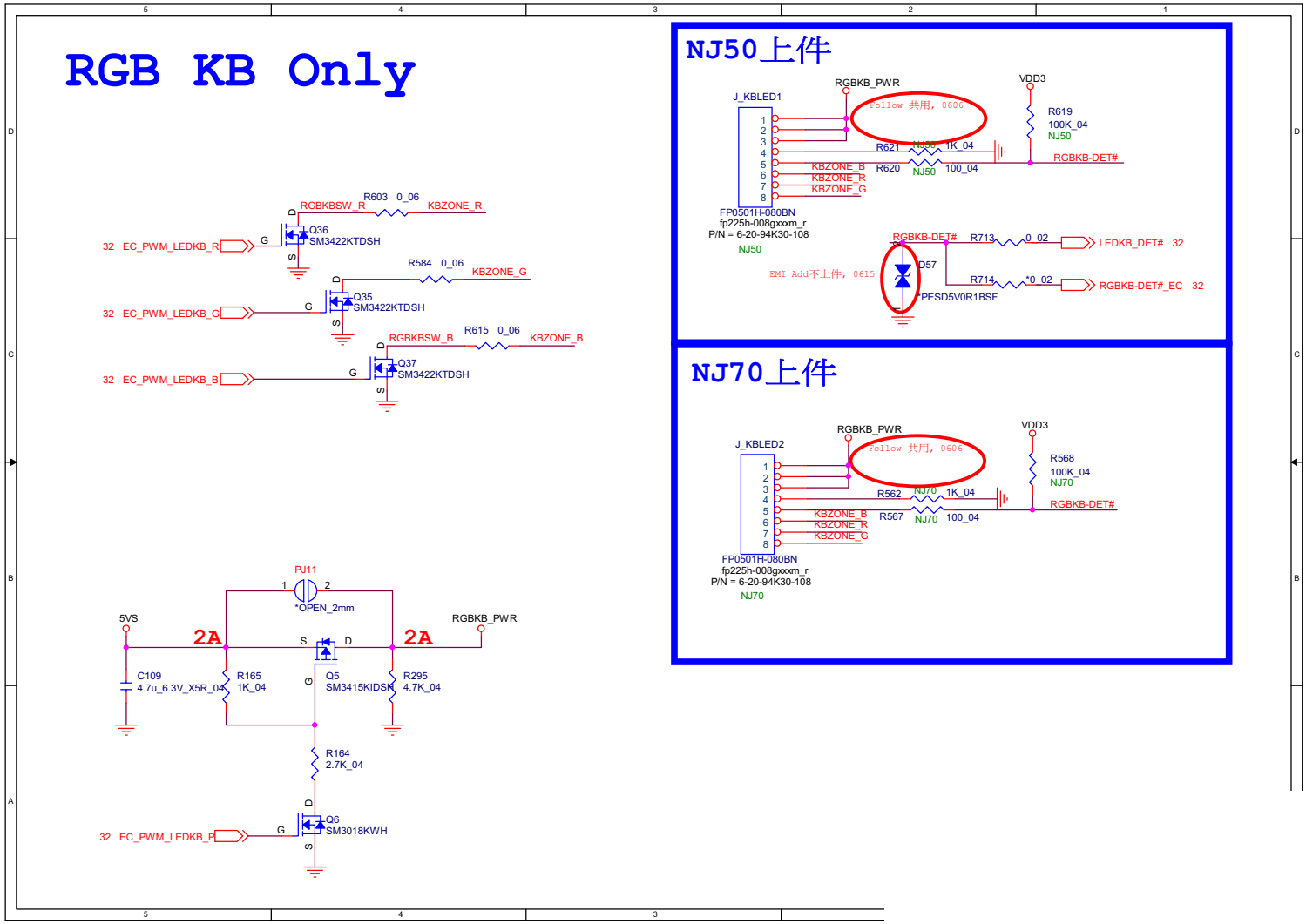

Sheet 20 of 48
RGB KB

TPM, PW Button, LID SW, LED

Sheet 21 of 48
TPM, PW Button, LID SW, LED

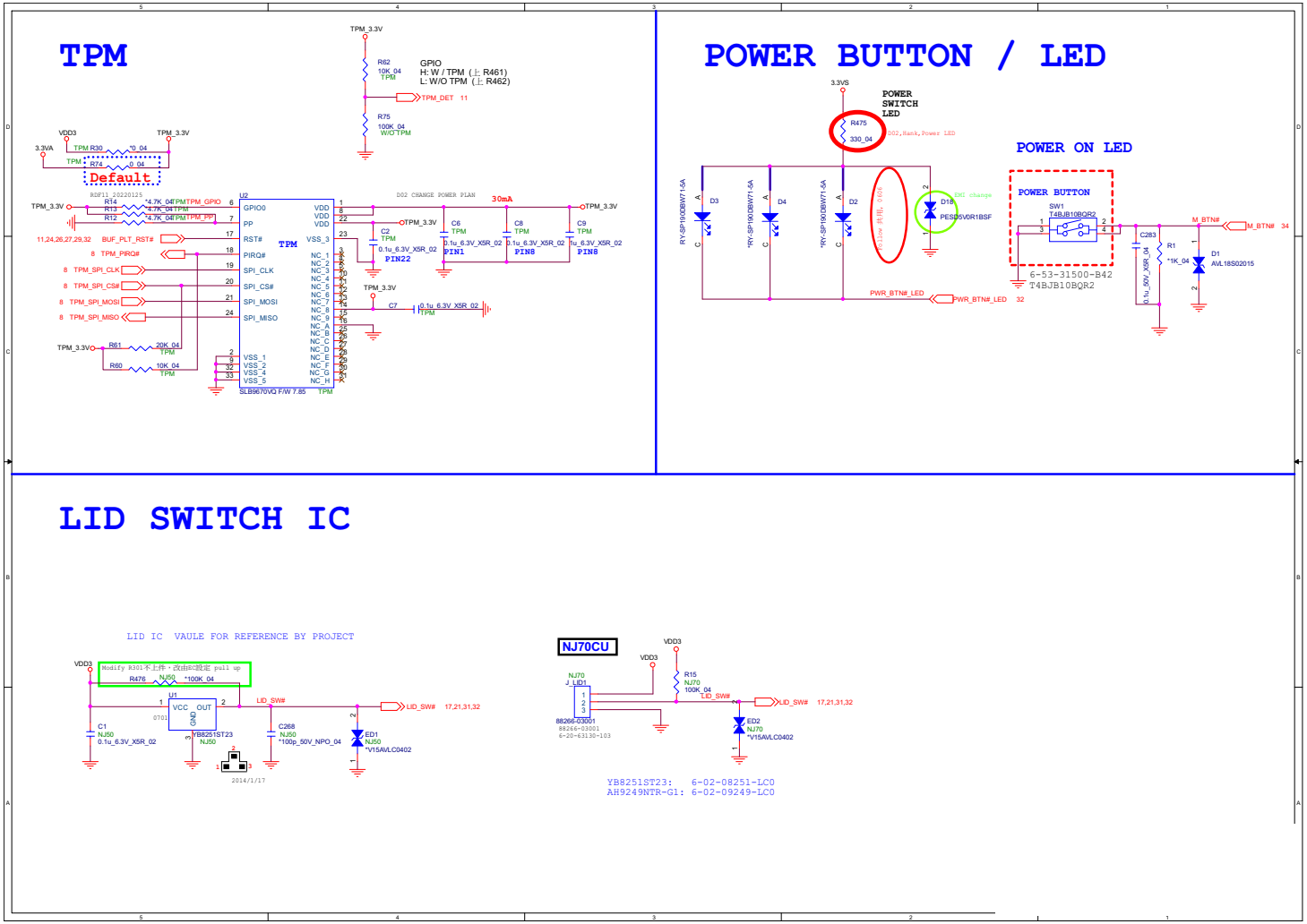

Type-C

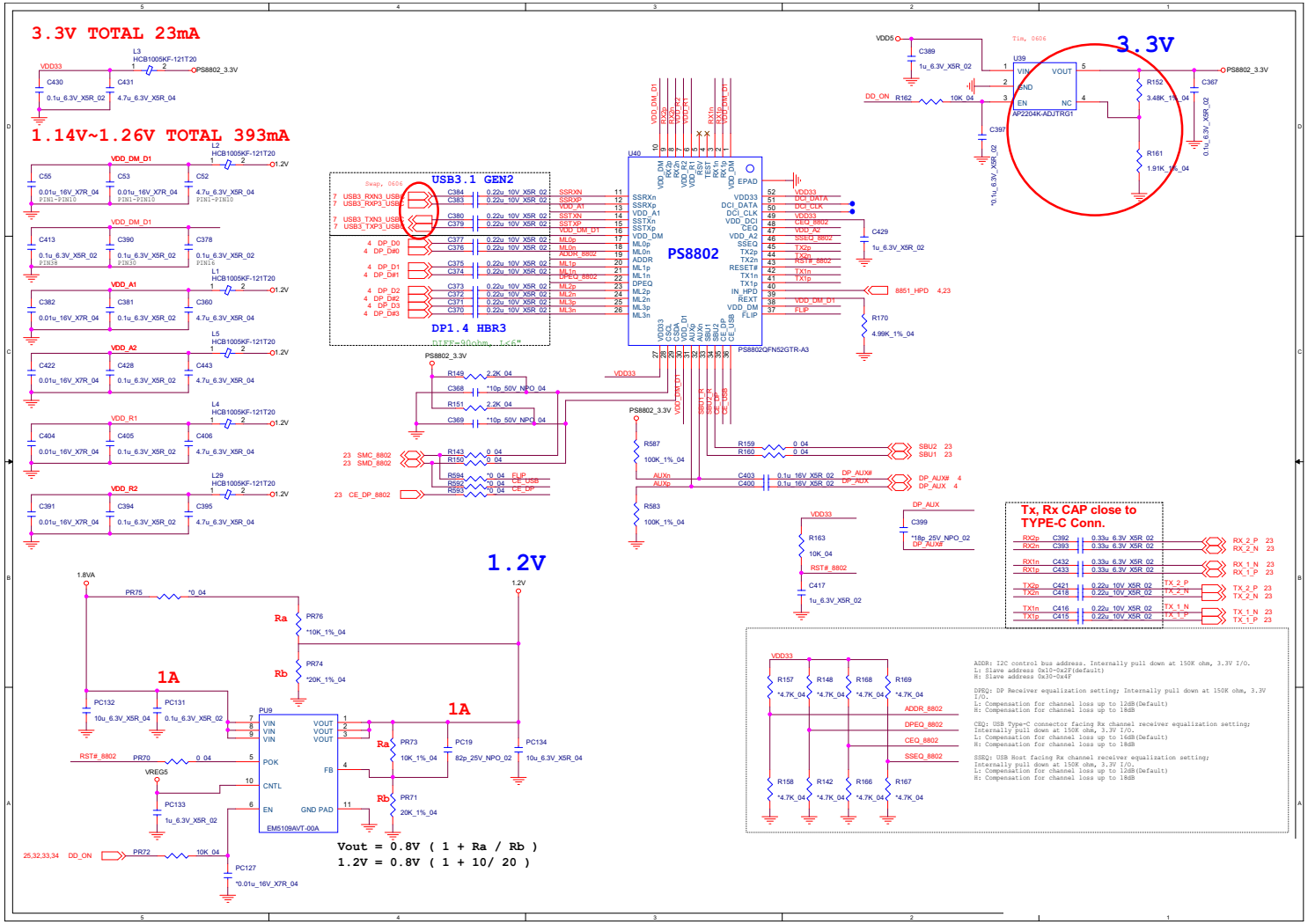

Sheet 22 of 48
Type-C

PD Controller IT8851

Sheet 23 of 48
PD Controller
IT8851

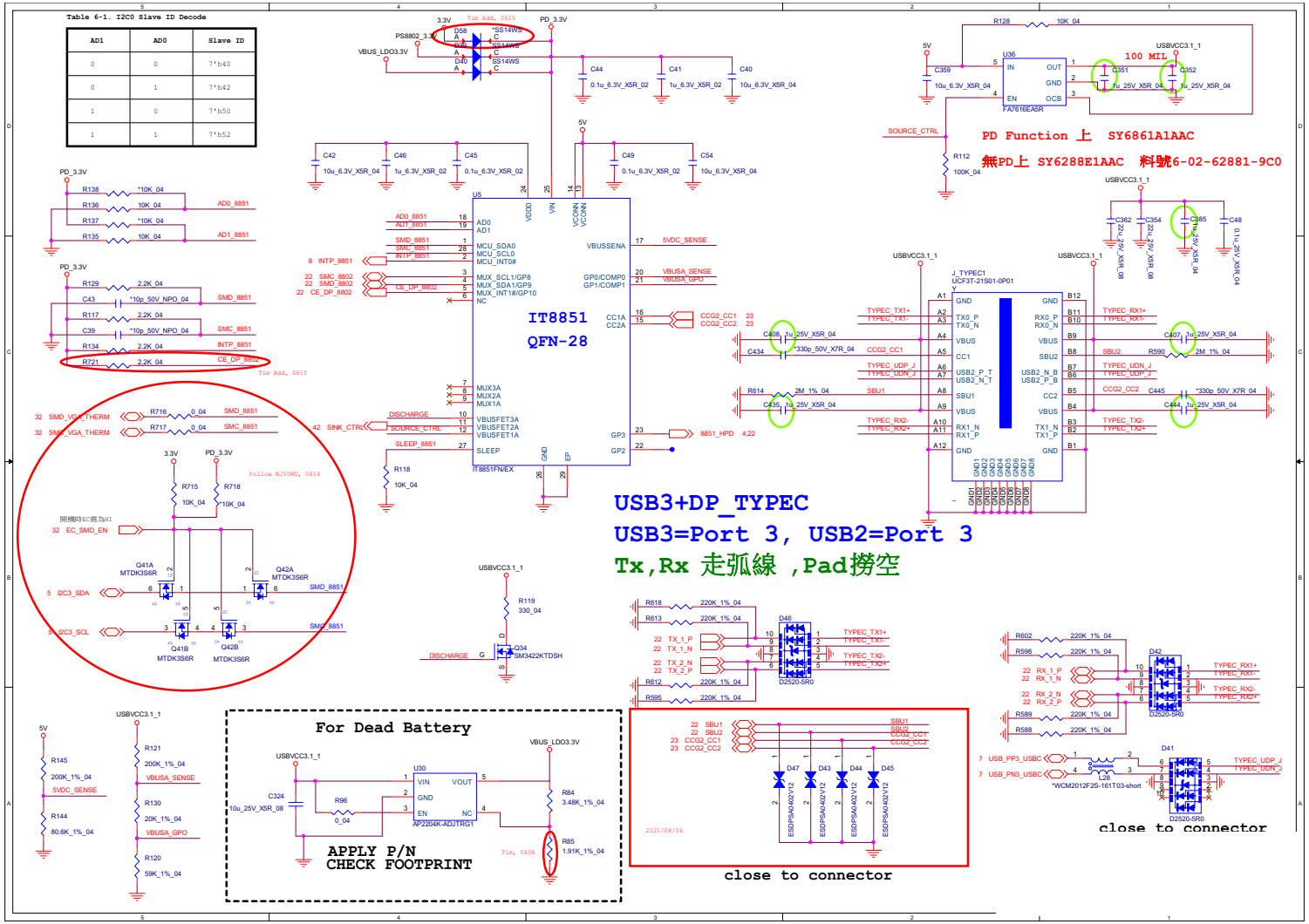

M Key PCIE SSD

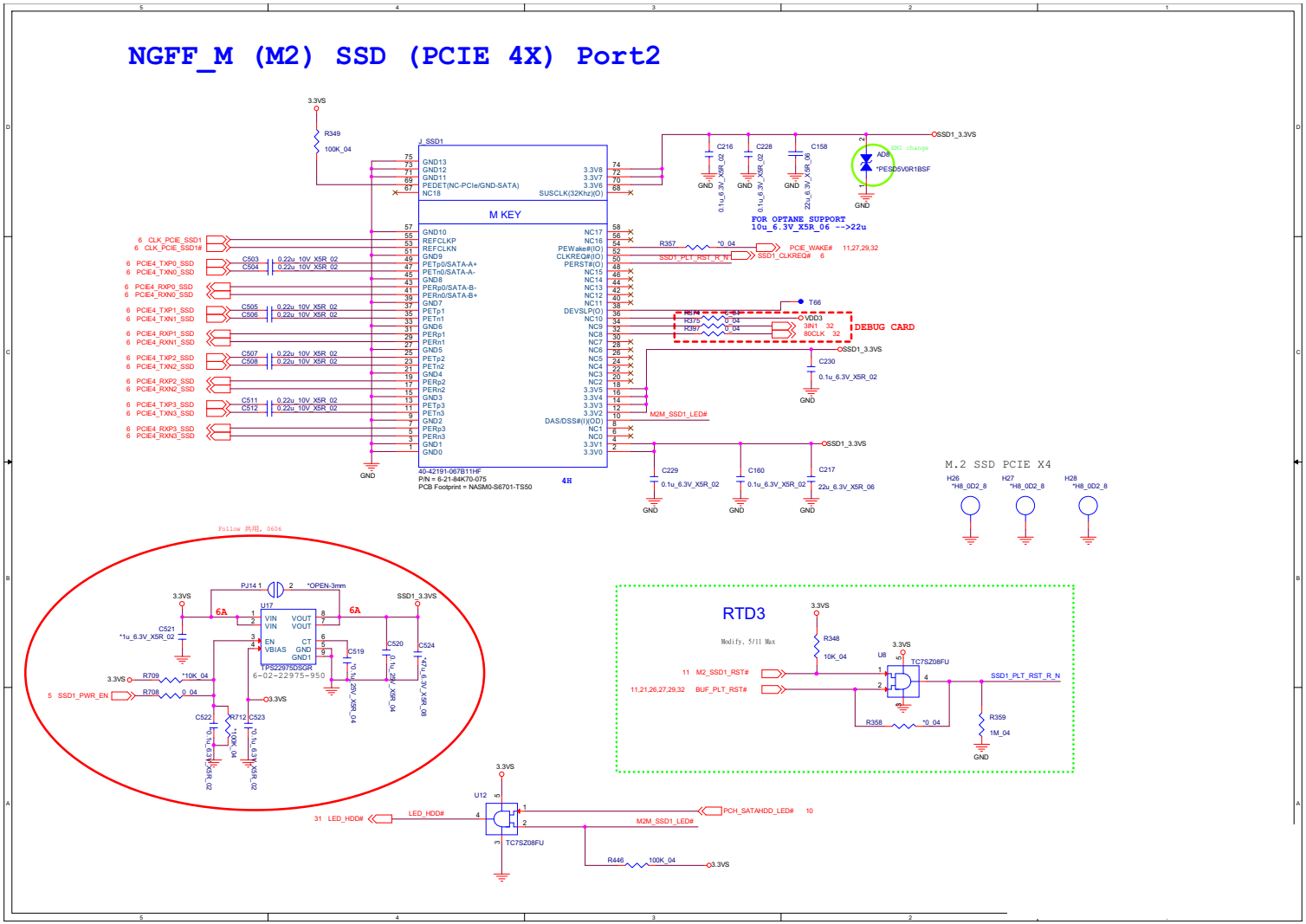

Sheet 24 of 48
M Key PCIE SSD

B.Schematic Diagrams

USB, HDD, ODD

Sheet 25 of 48
USB, HDD, ODD

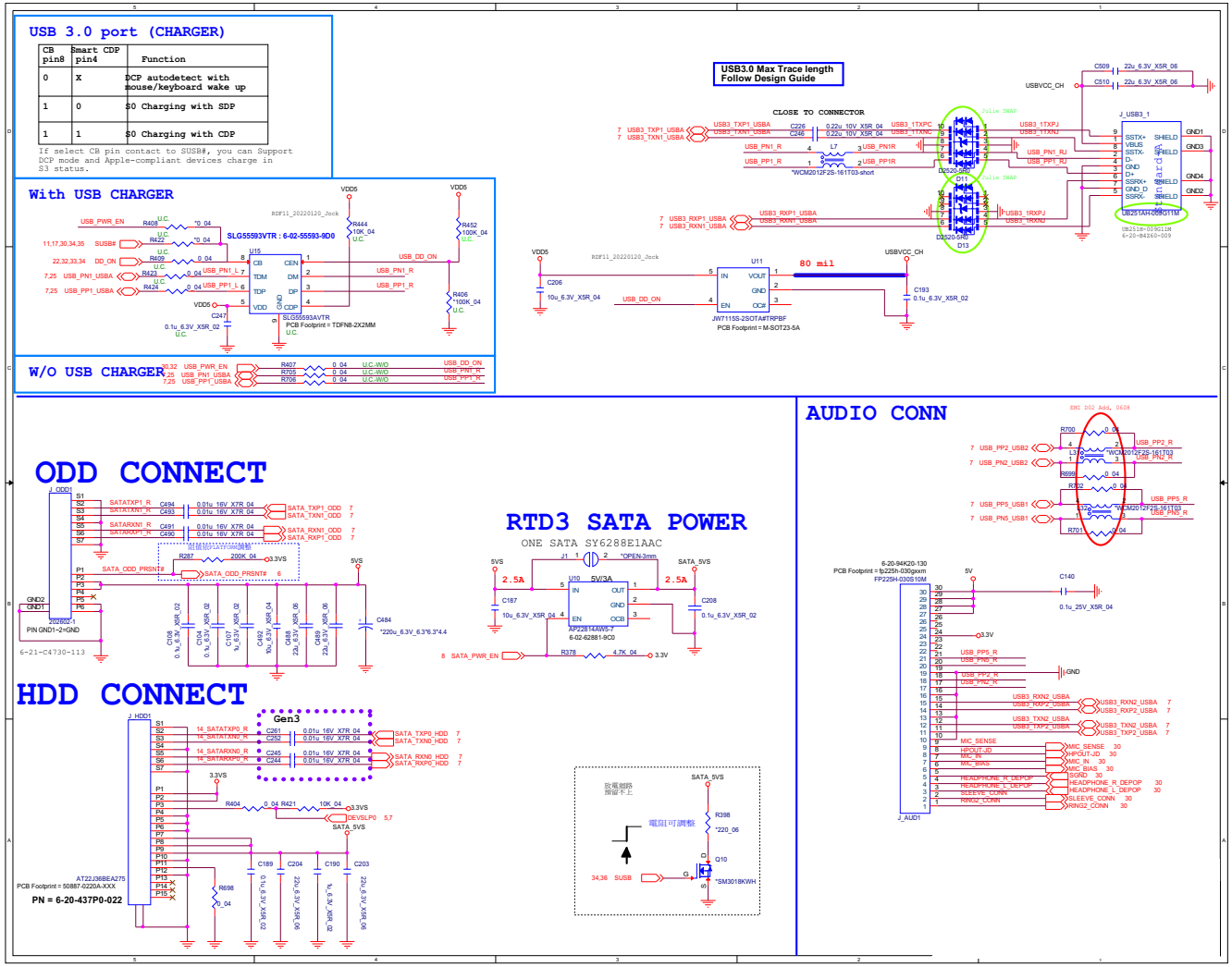

LAN I219V

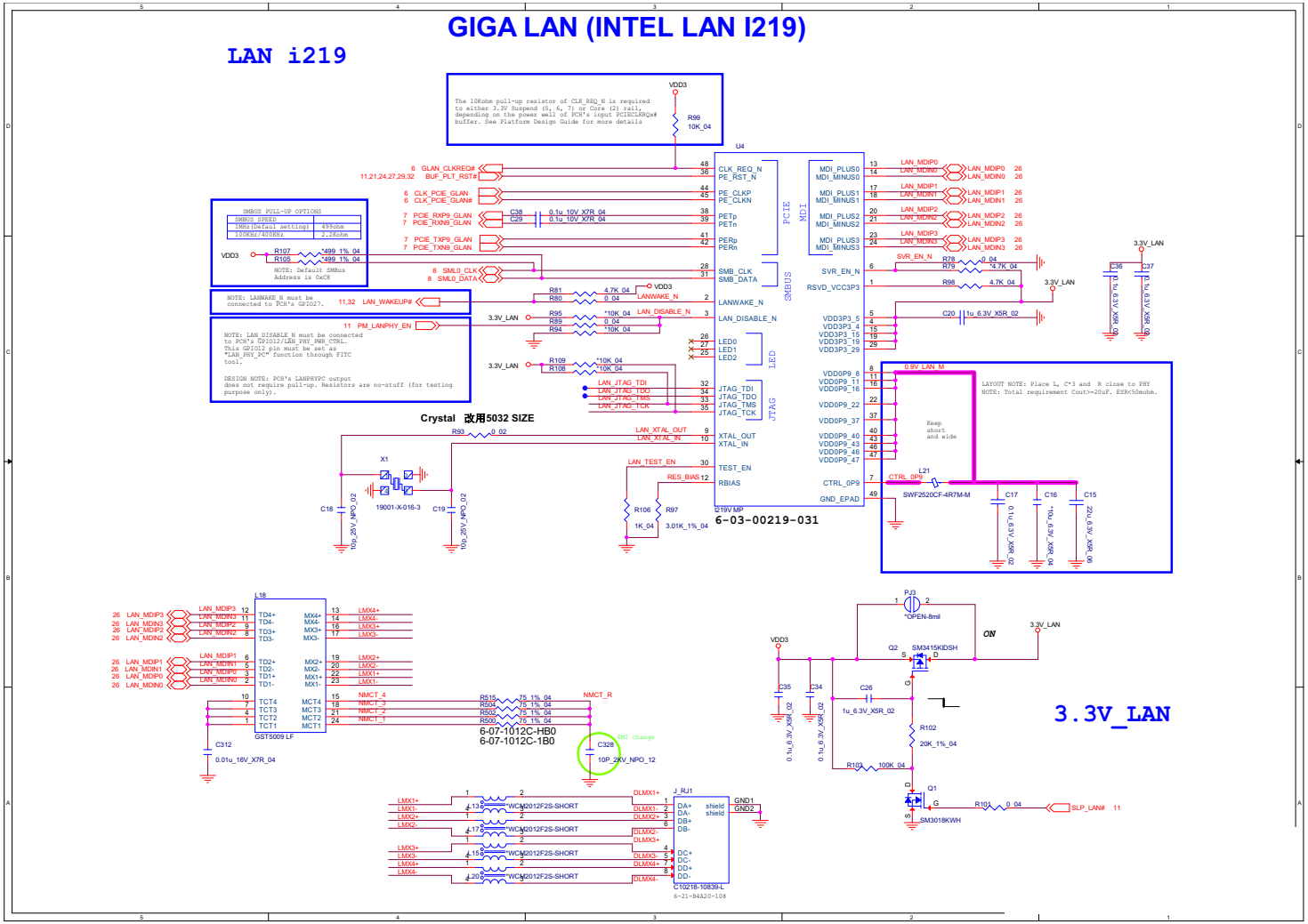

Sheet 26 of 48
LAN I219V

Card Reader OZ711

Sheet 27 of 48
Card Reader OZ711

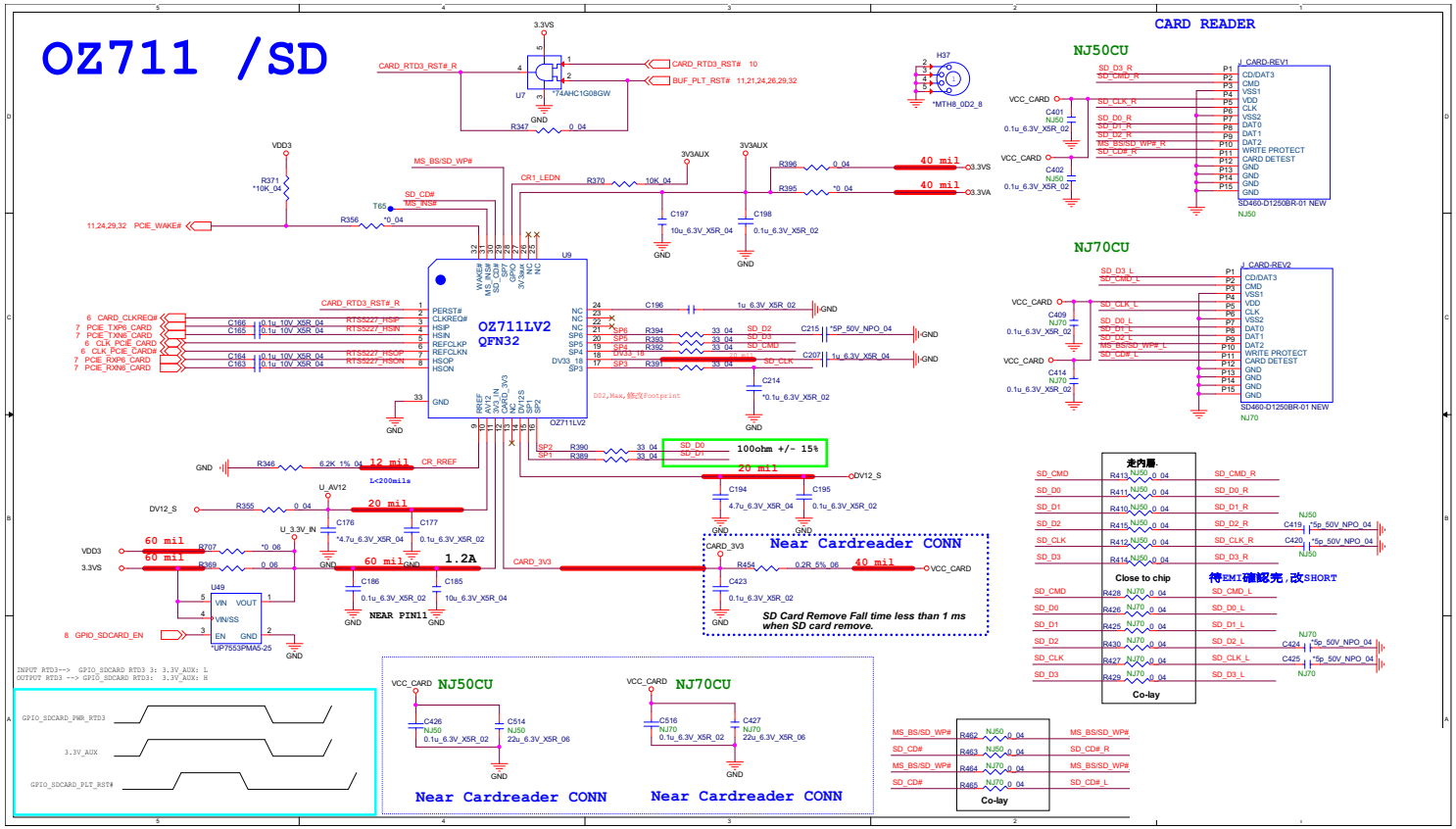

M.2 Card (3G/LTE)

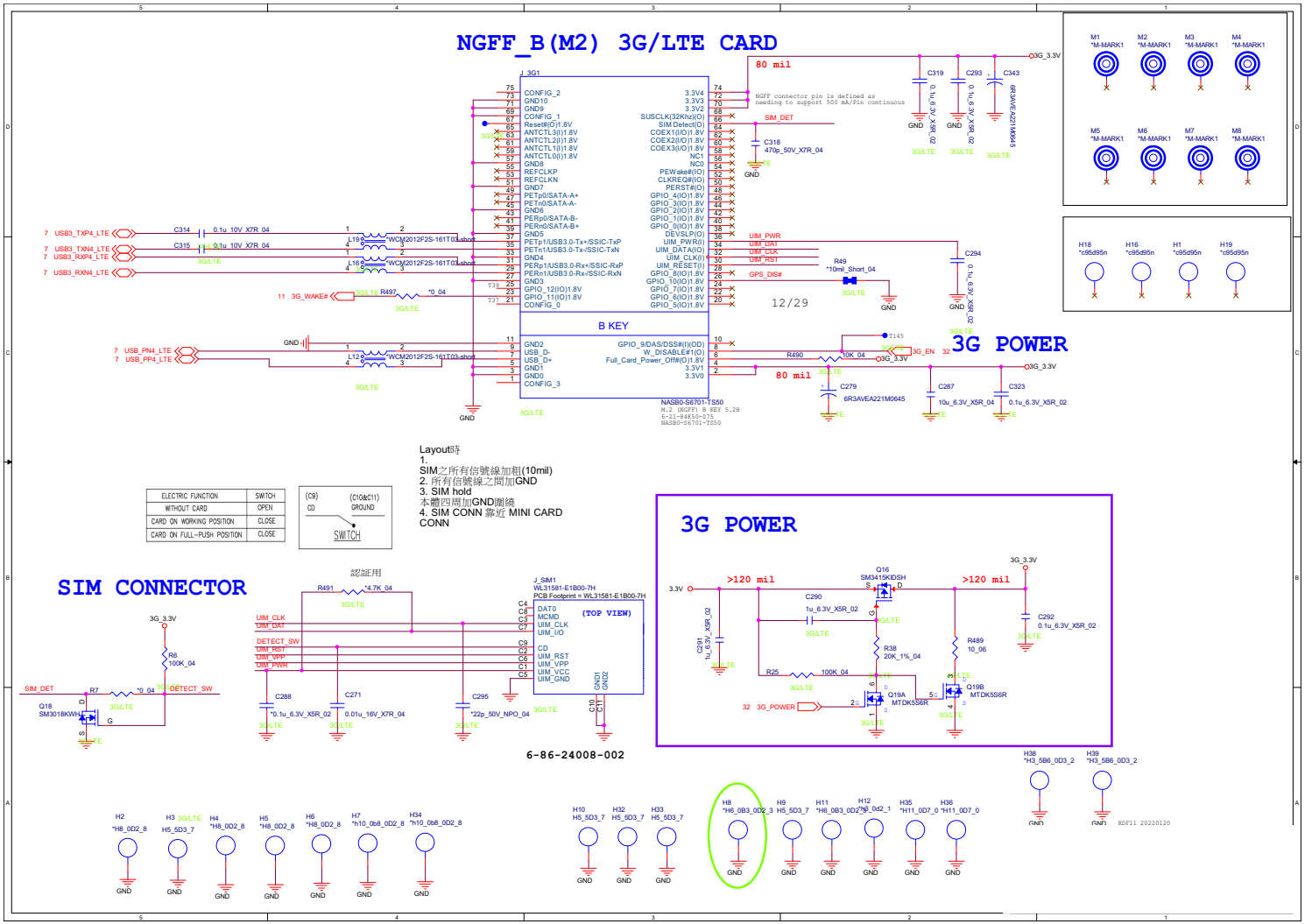

Sheet 28 of 48
M.2 Card (3G/LTE)

M.2 Card (BT/WLAN)

Sheet 29 of 48
M.2 Card (BT/ WLAN)

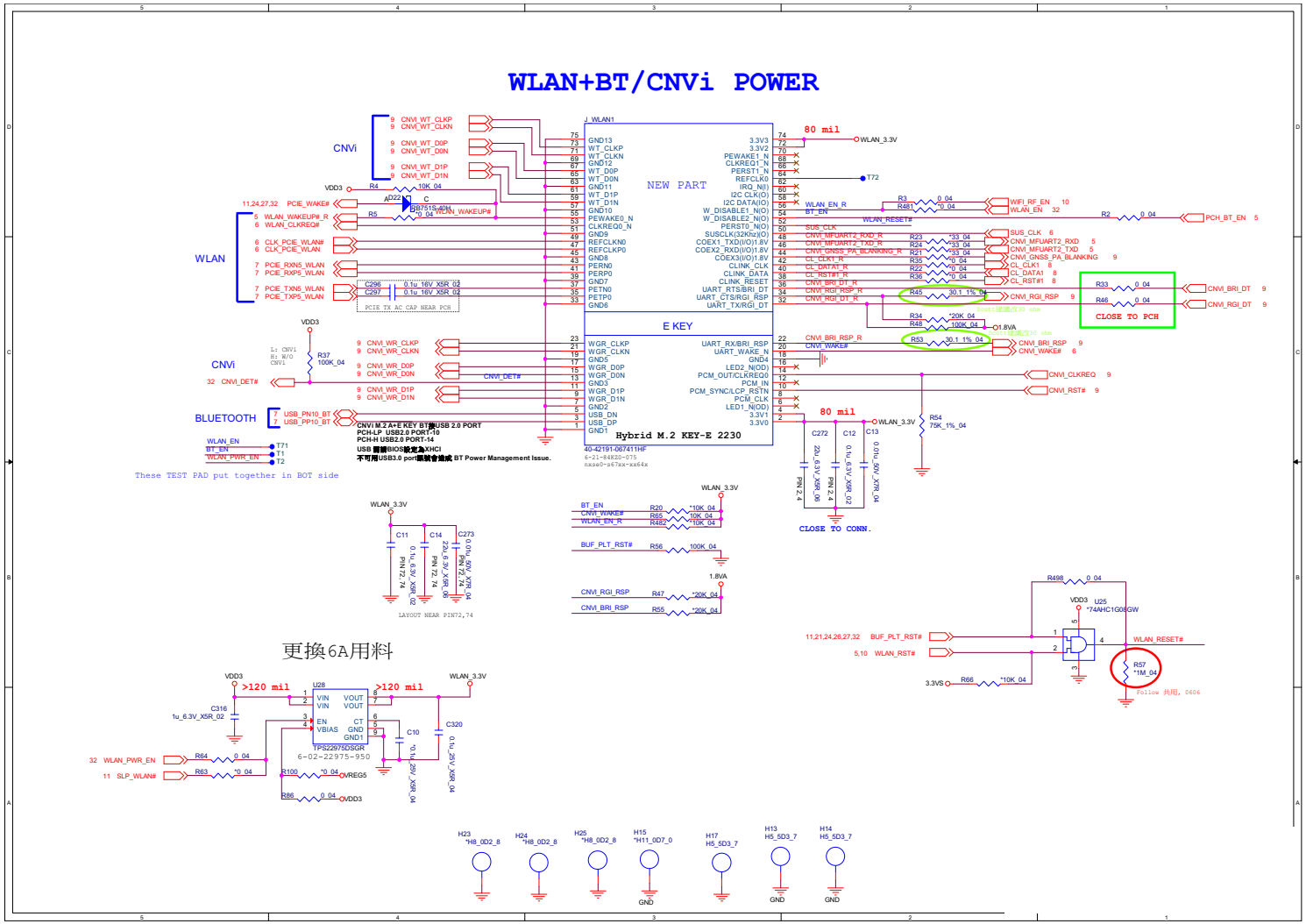

Audio Codec

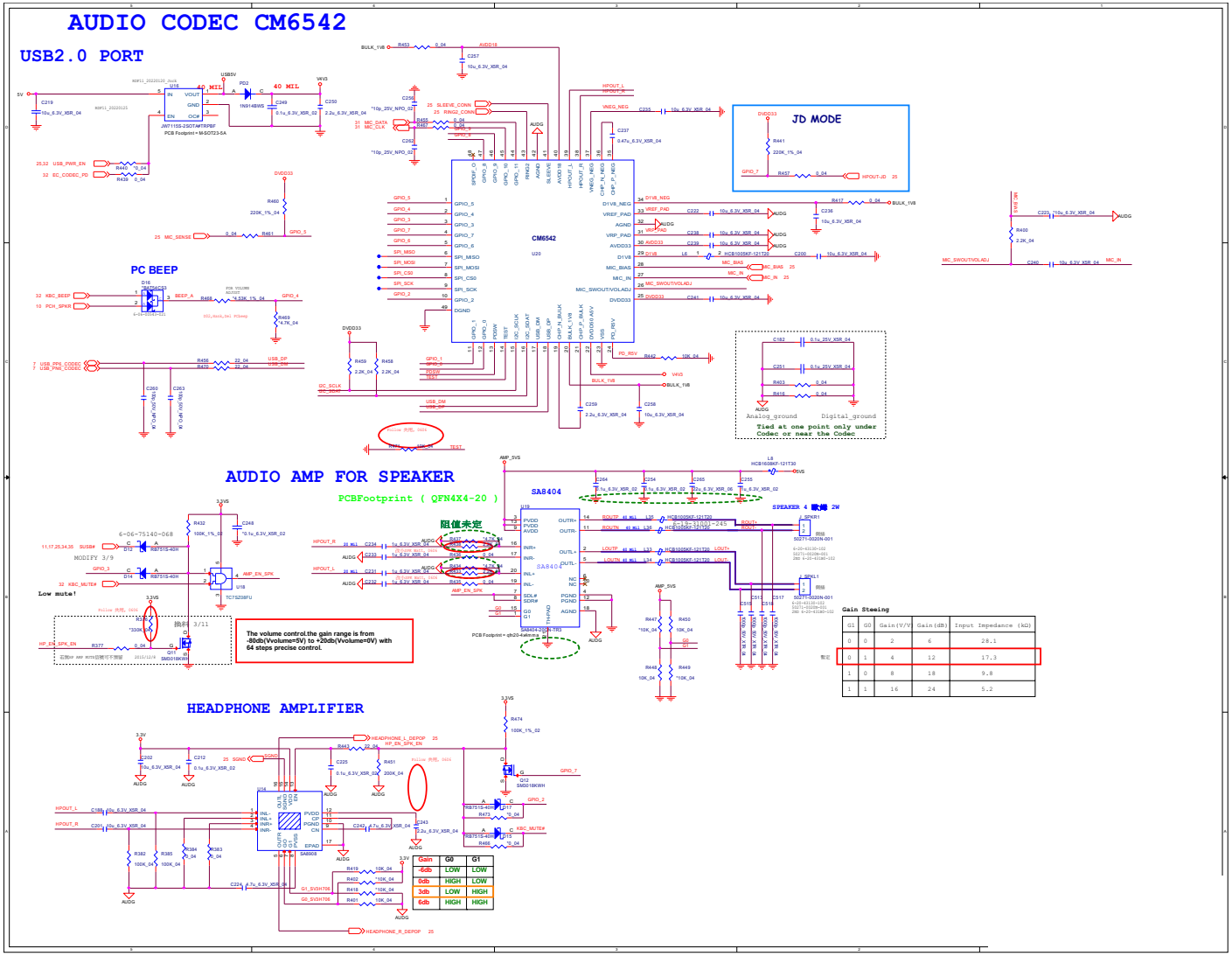

Sheet 30 of 48
Audio Codec

CONN FAN, TP, CCD, LED

Sheet 31 of 48
CONN FAN, TP, CCD, LED

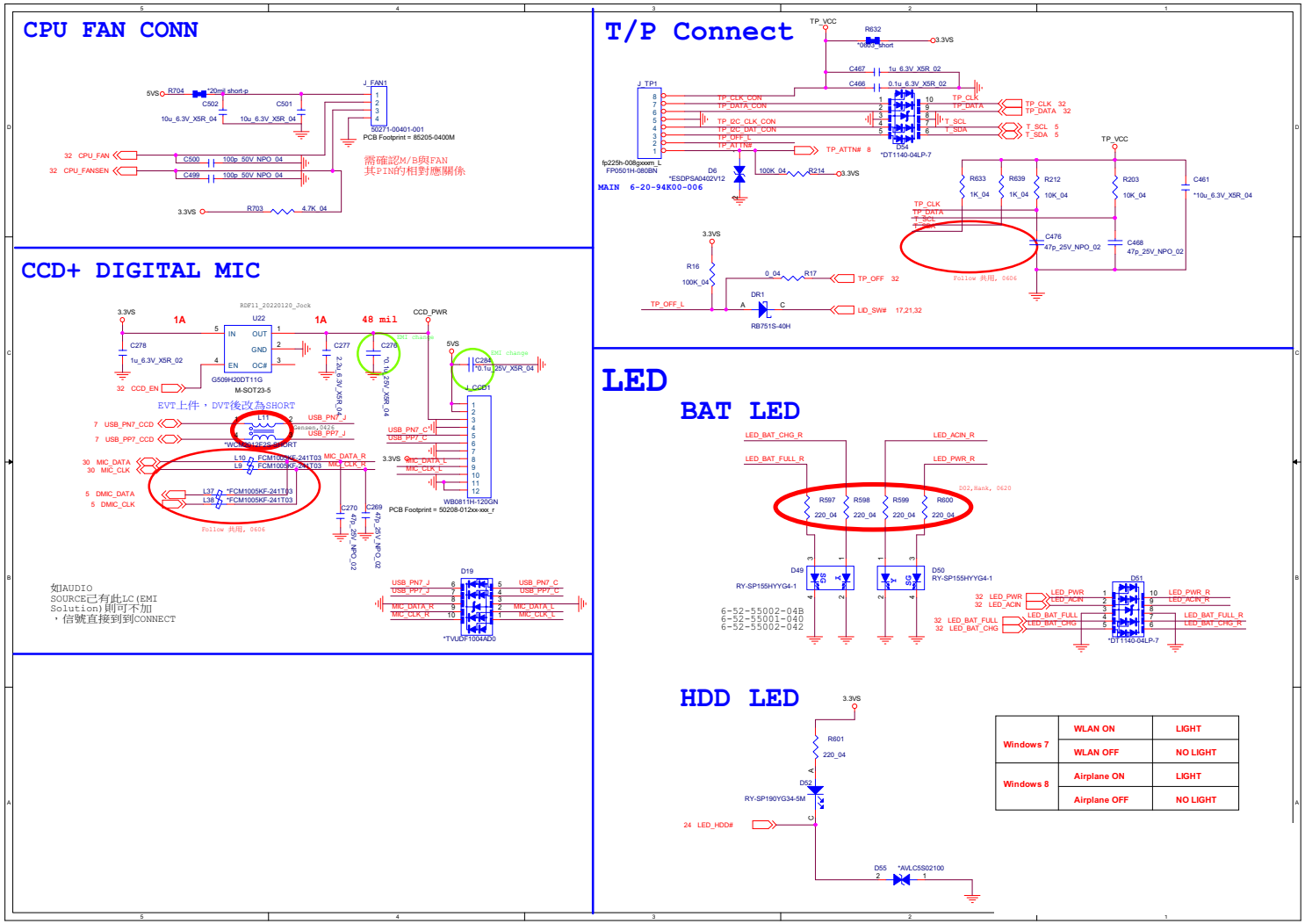

Windows 7	WLAN ON	LIGHT
	WLAN OFF	NO LIGHT
Windows 8	Airplane ON	LIGHT
	Airplane OFF	NO LIGHT

KBC ITE IT5570

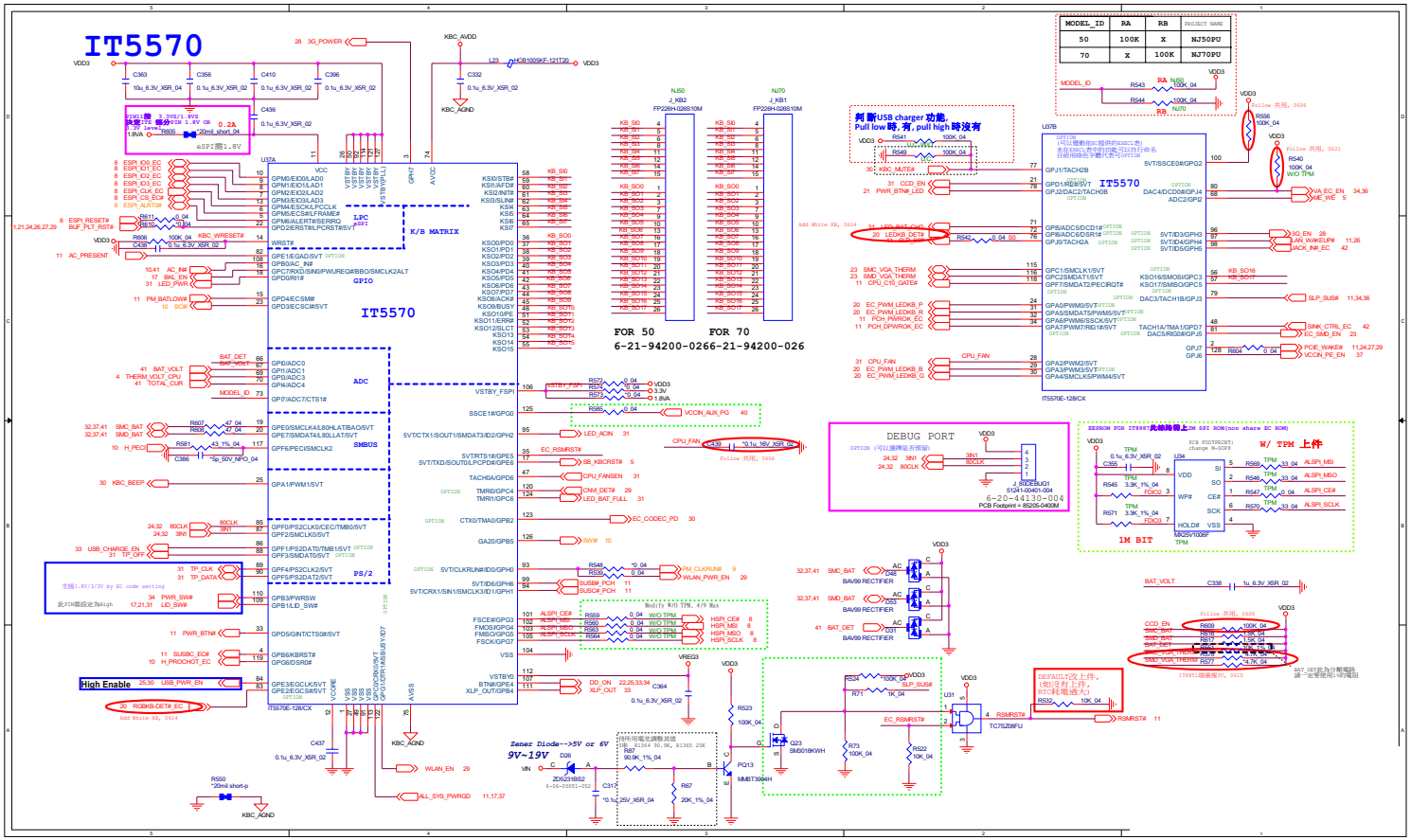

Sheet 32 of 48
KBC ITE IT5570

VDD3 / VDD5

Sheet 33 of 48
VDD3 / VDD5

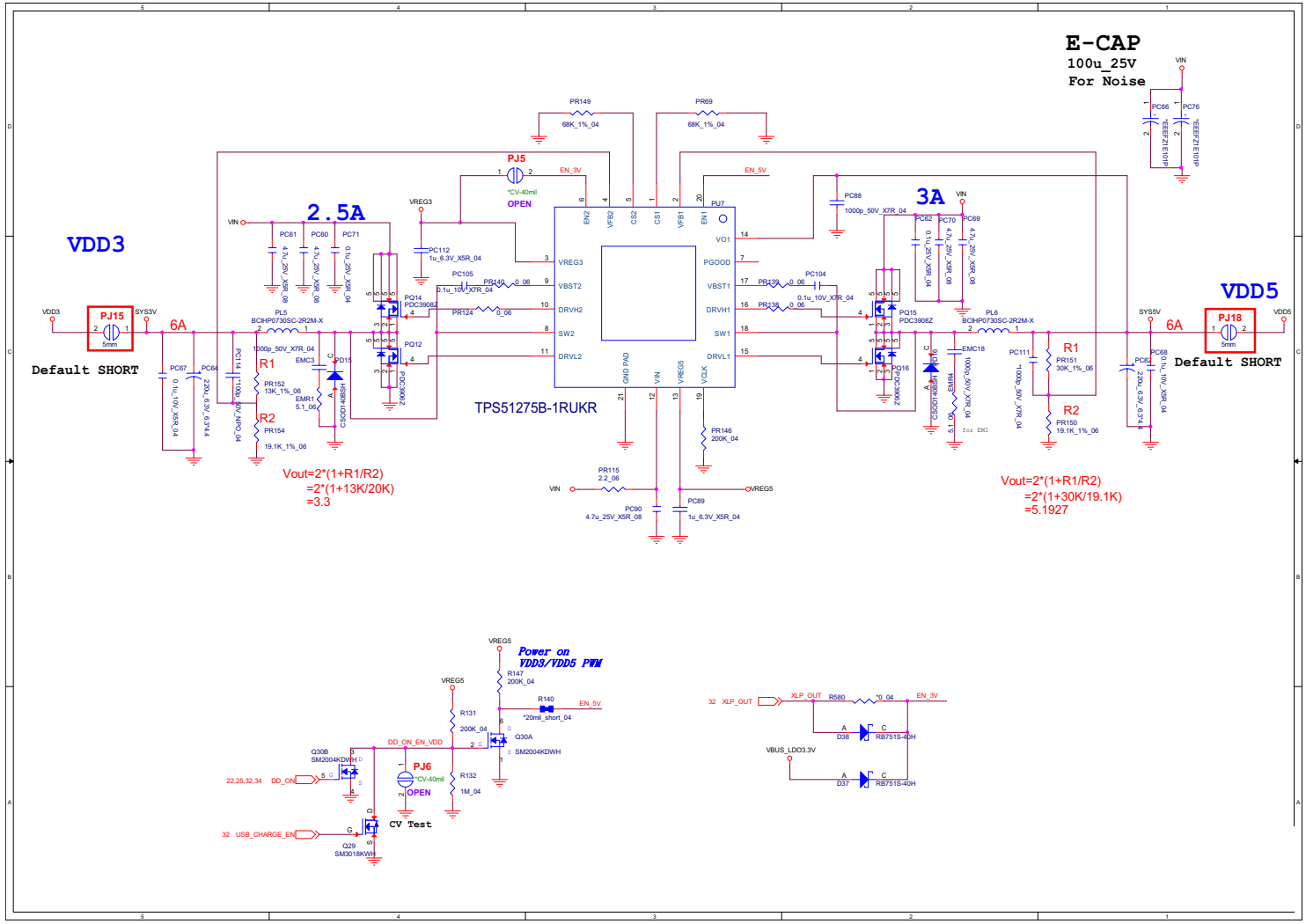

3.3V, 5V, 3VS, 5VS, CTL

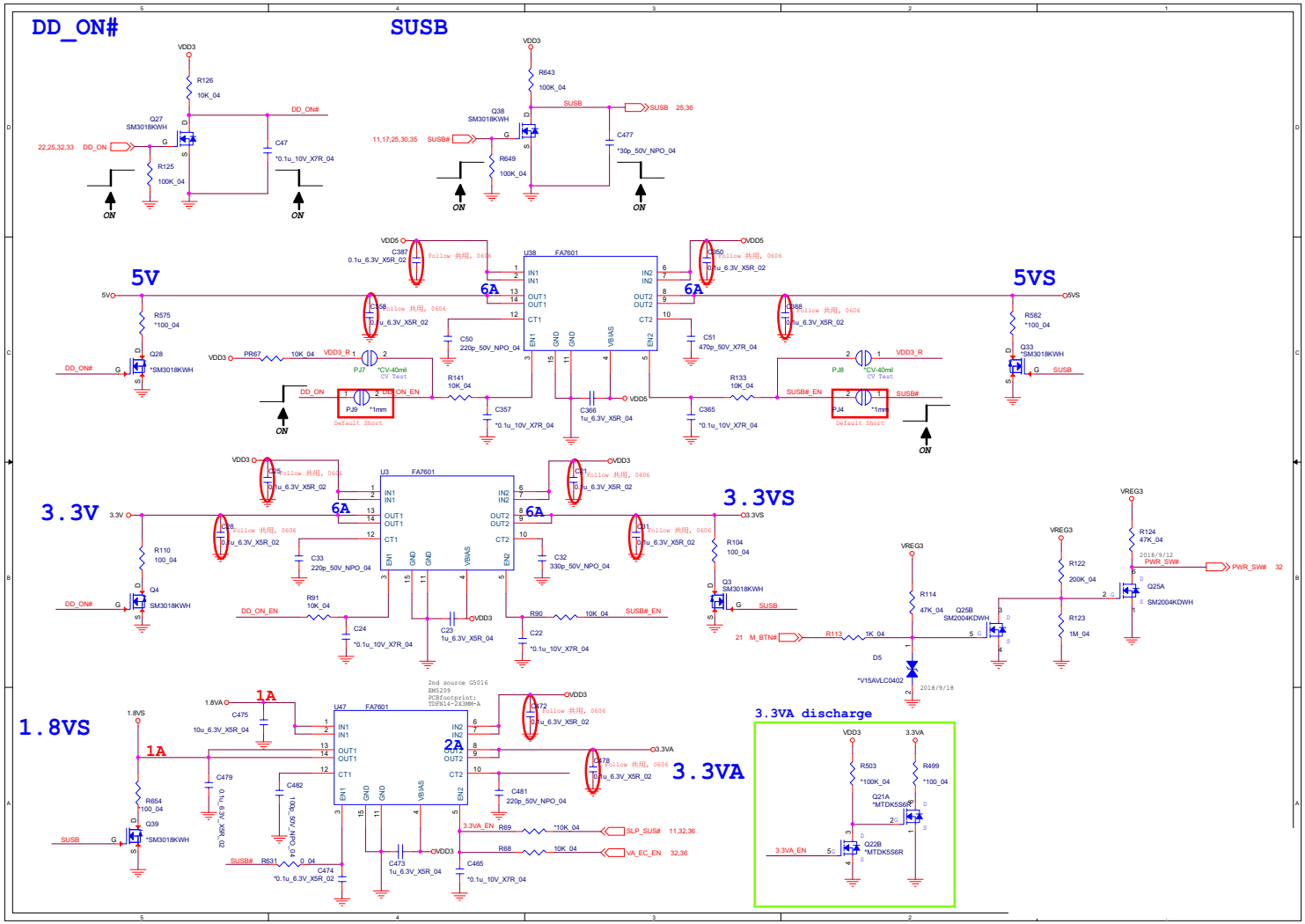

Sheet 34 of 48
3.3V, 5V, 3VS, 5VS, CTL

2.5V, VCCST, VCCSTG

Sheet 35 of 48
2.5V, VCCST, VCCSTG

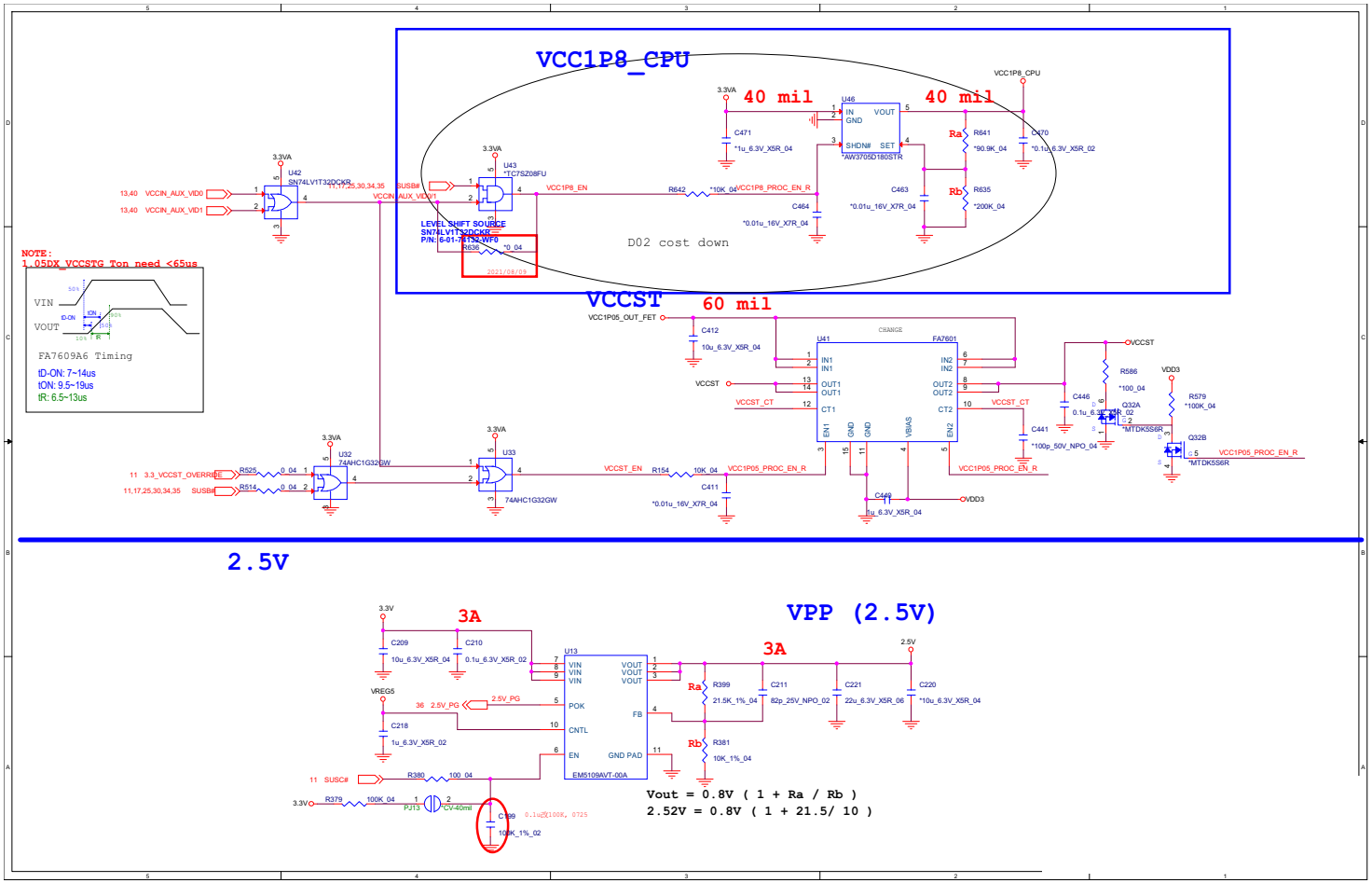

VDDQ, VDDQ_VTT, 1.8VA

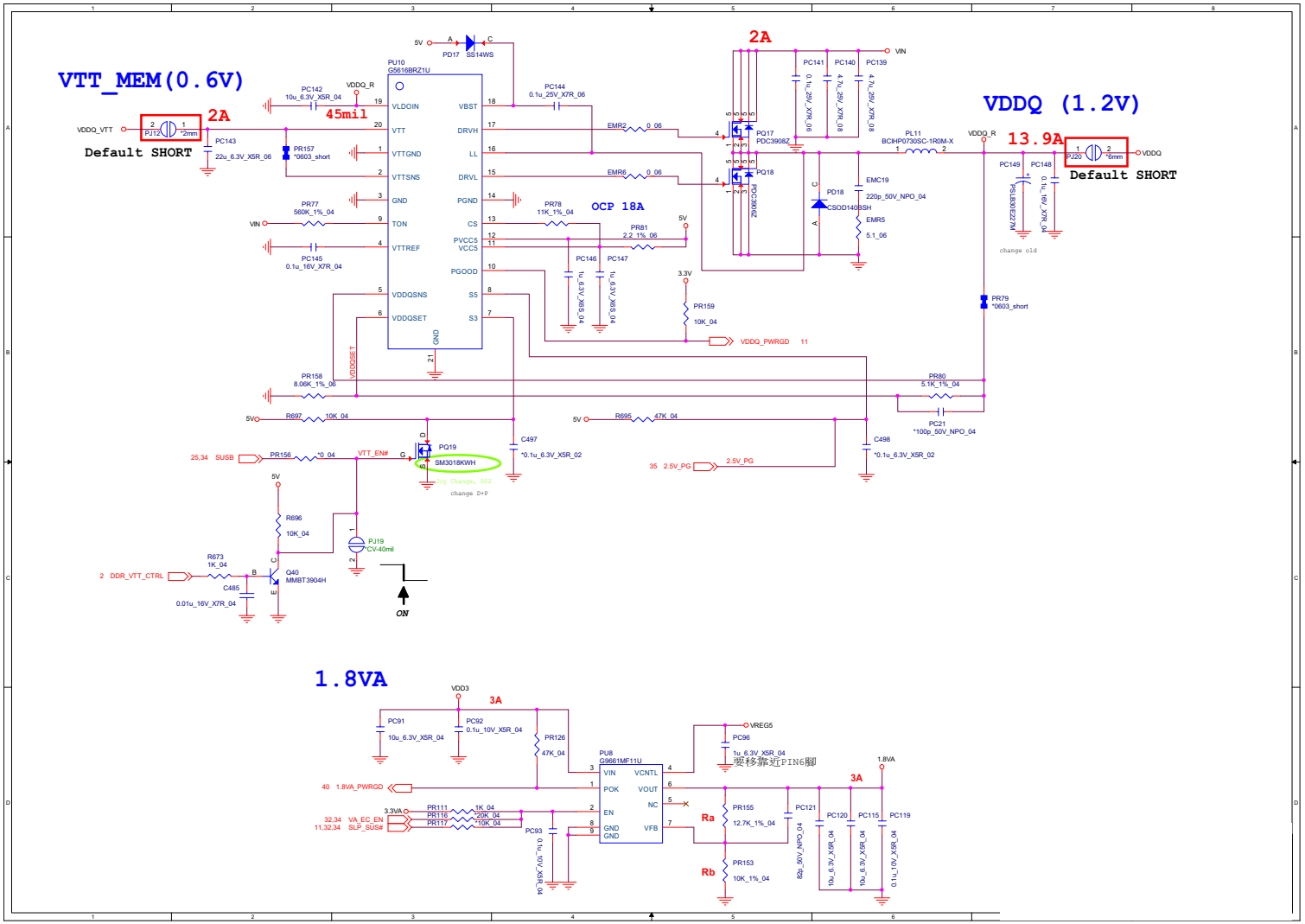

Sheet 36 of 48
VDDQ, VDDQ_VTT, 1.8VA

MP2964 Controller

Sheet 37 of 48
MP2964 Controller

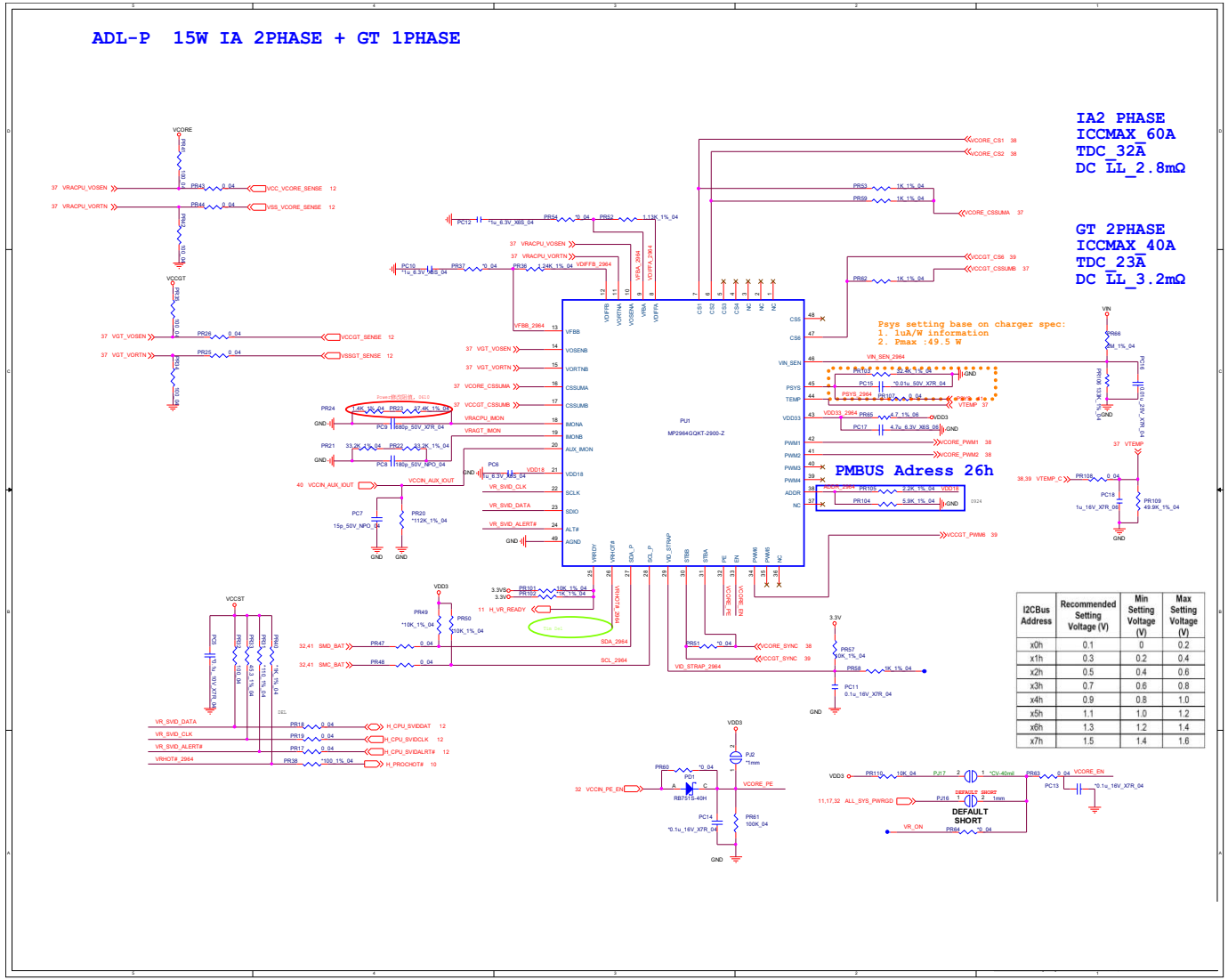

I2CBus Address	Recommended Setting Voltage (V)	Min Setting Voltage (V)	Max Setting Voltage (V)
x0h	0.1	0	0.2
x1h	0.3	0.2	0.4
x2h	0.5	0.4	0.6
x3h	0.7	0.6	0.8
x4h	0.9	0.8	1.0
x5h	1.1	1.0	1.2
x6h	1.3	1.2	1.4
x7h	1.5	1.4	1.6

VCore

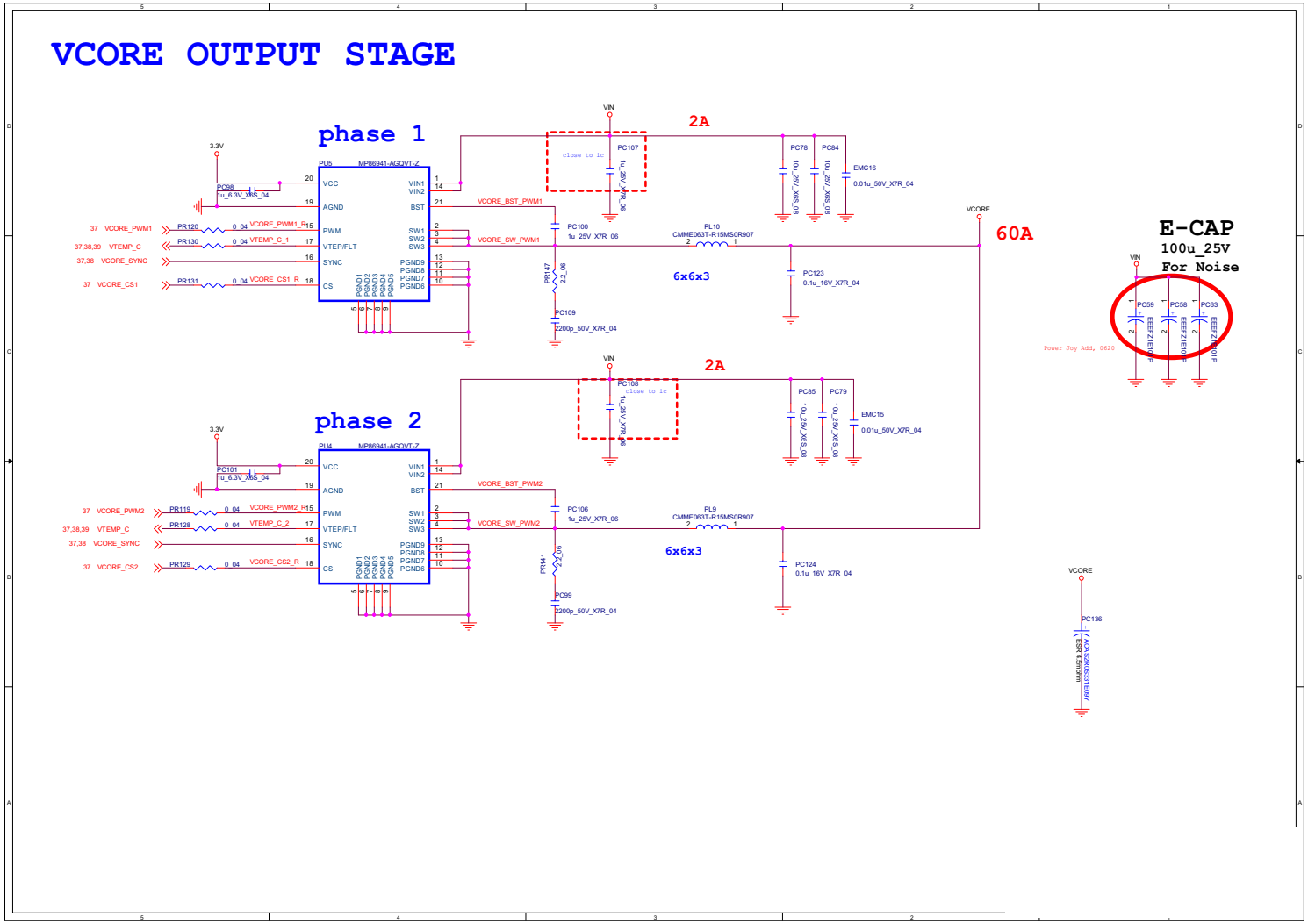

Sheet 38 of 48
VCore

VCCGT

Sheet 39 of 48
VCCGT

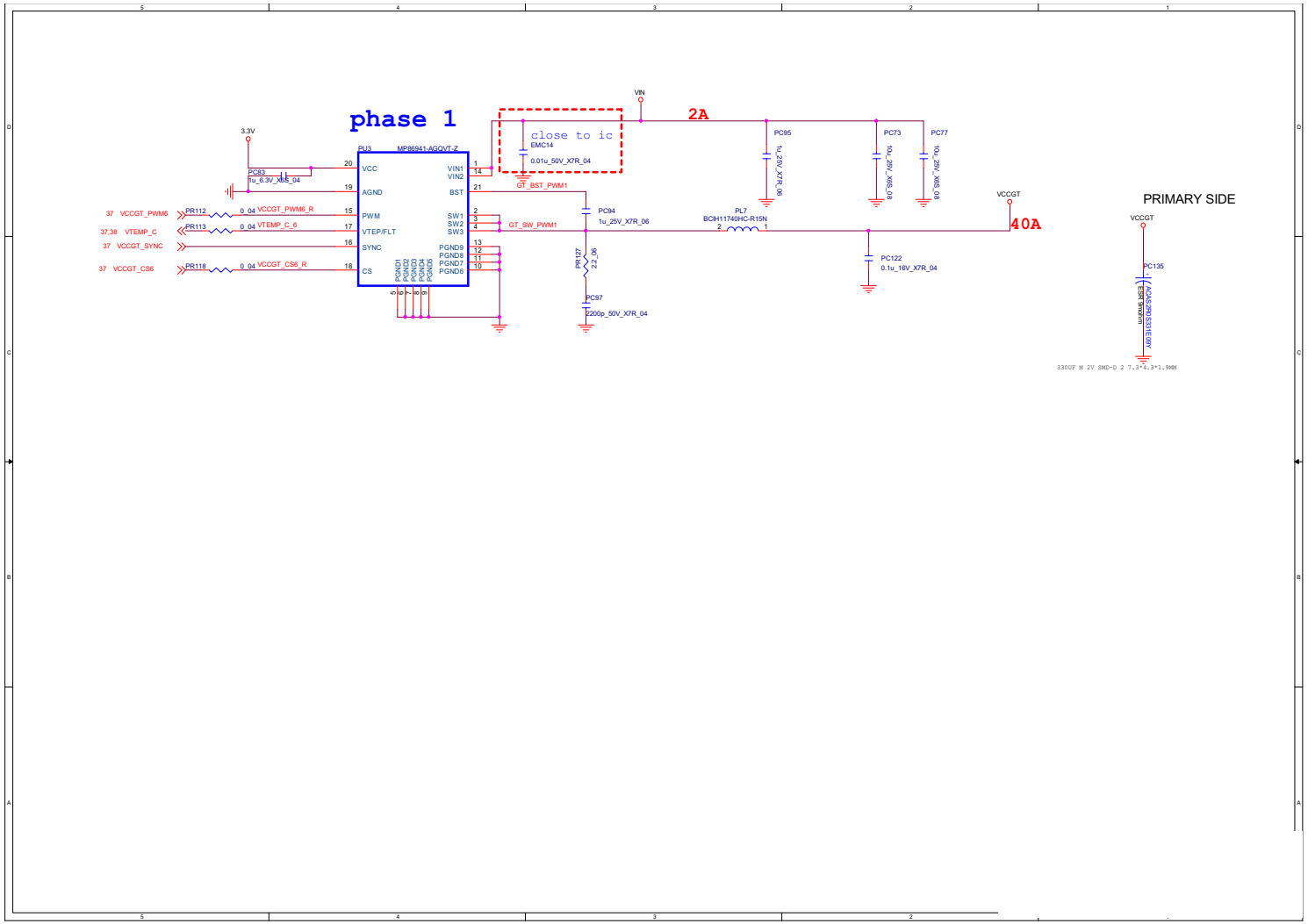

VCCIN

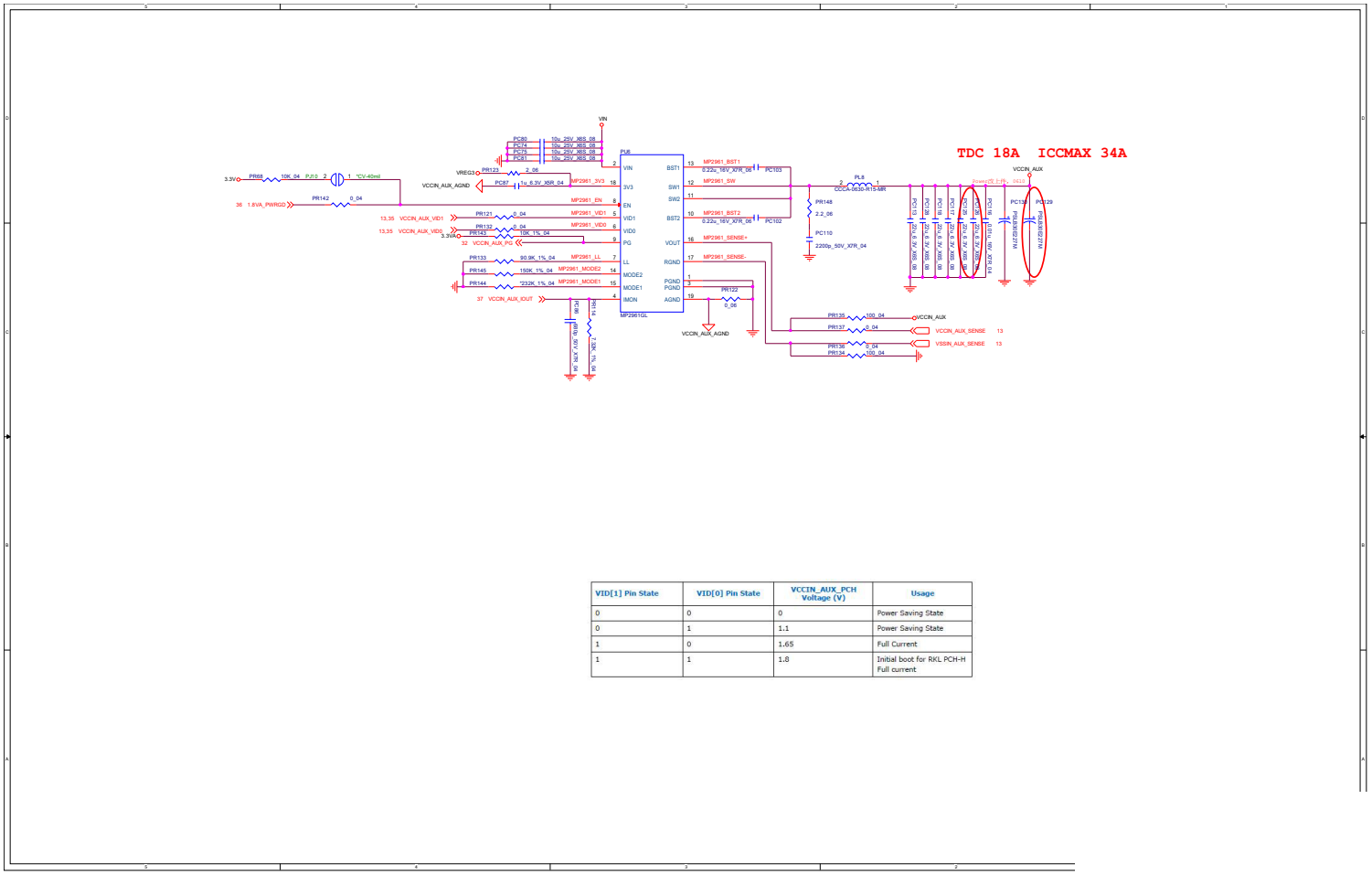

VID[1] Pin State	VID[0] Pin State	VCCIN_AUX_PCH Voltage (V)	Usage
0	0	0	Power Saving State
0	1	1.1	Power Saving State
1	0	1.65	Full Current
1	1	1.8	Initial boot for RKL PCH-H Full current

Sheet 40 of 48
VCCIN

Charger

Sheet 41 of 48
Charger

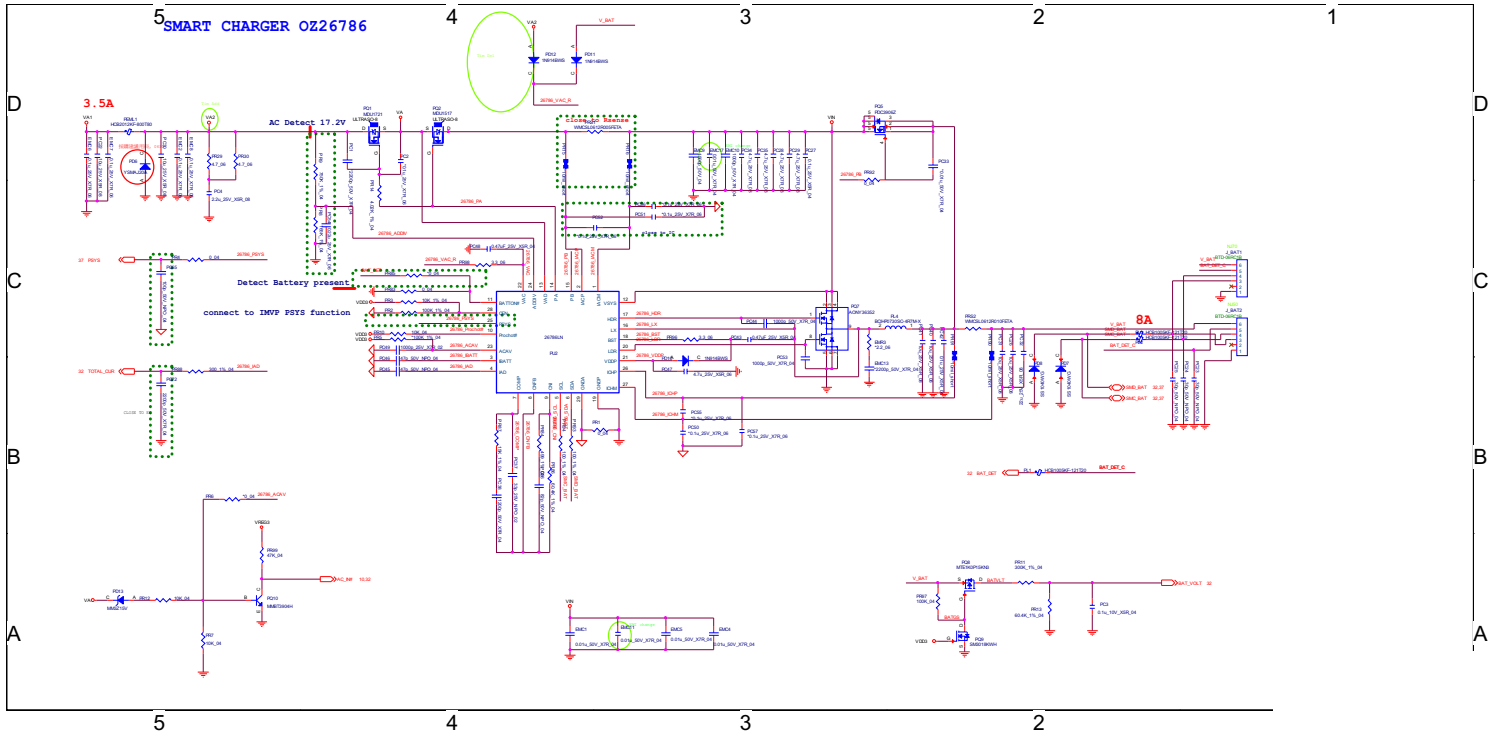

AC IN

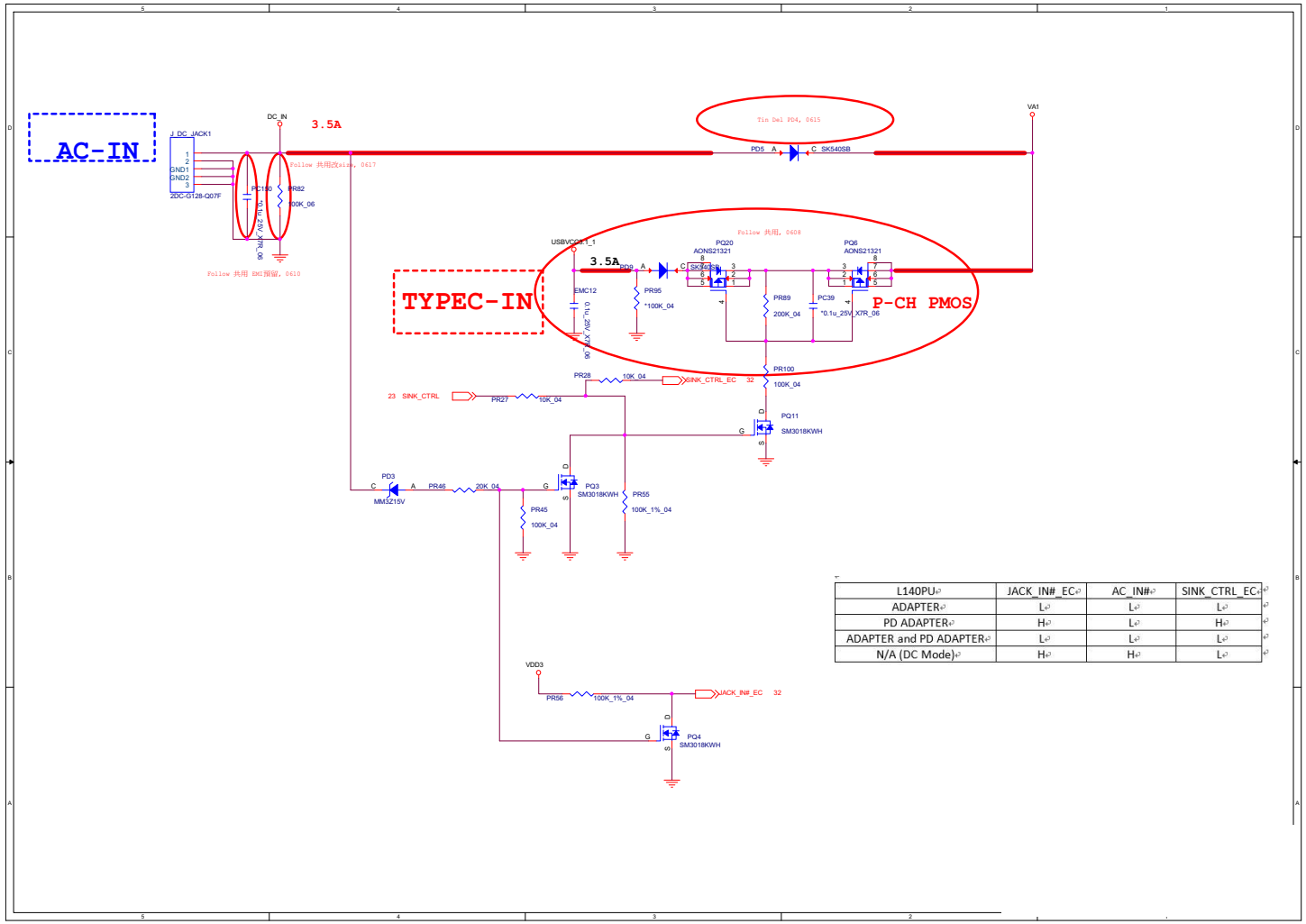

L140PU	JACK_IN#_EC	AC_IN#	SINK_CTRL_EC
ADAPTER	L	L	L
PD ADAPTER	H	L	H
ADAPTER and PD ADAPTER	L	L	L
N/A (DC Mode)	H	H	L

Sheet 42 of 48
AC IN

Audio Board

Sheet 43 of 48
Audio Board

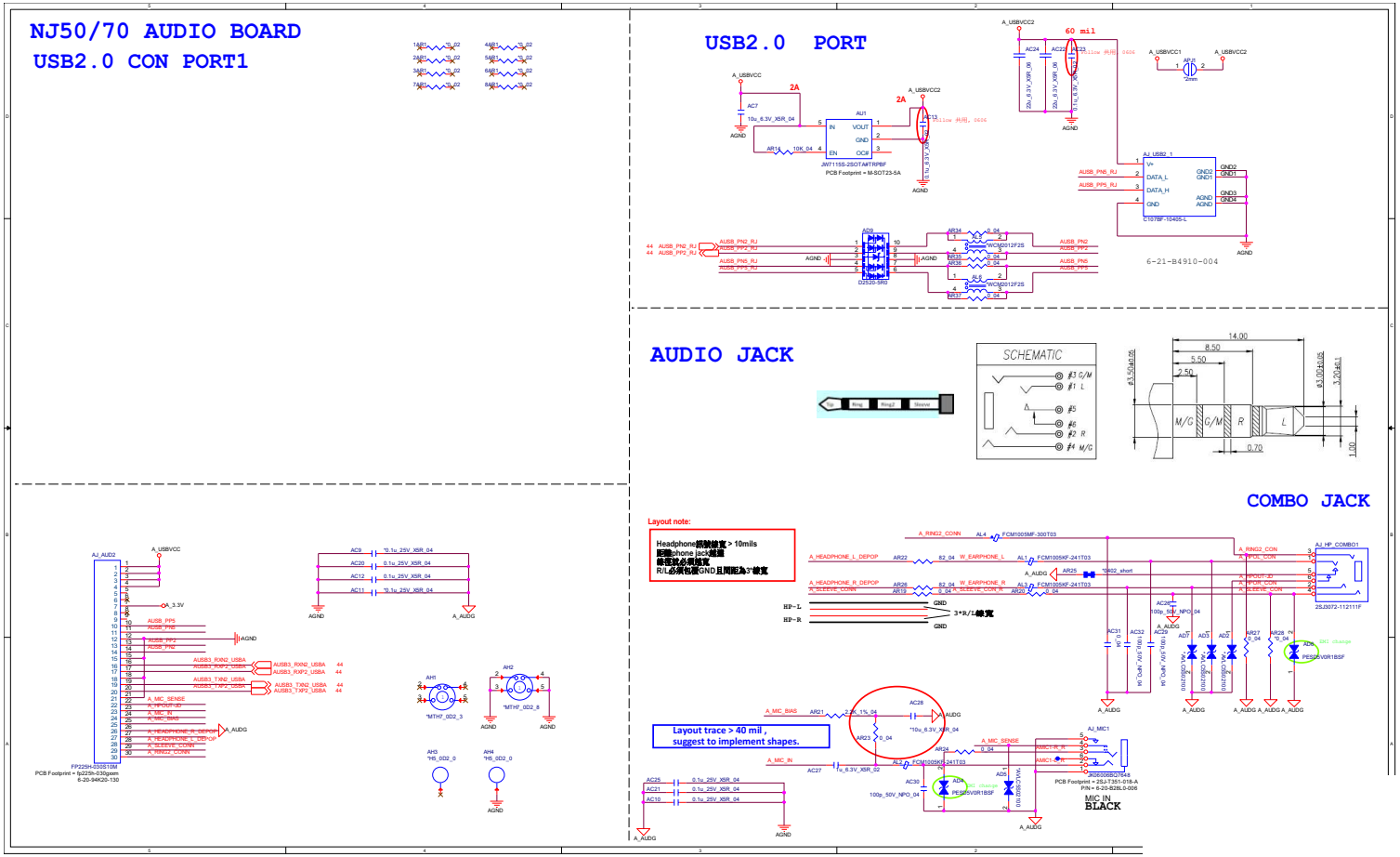

Audio Board

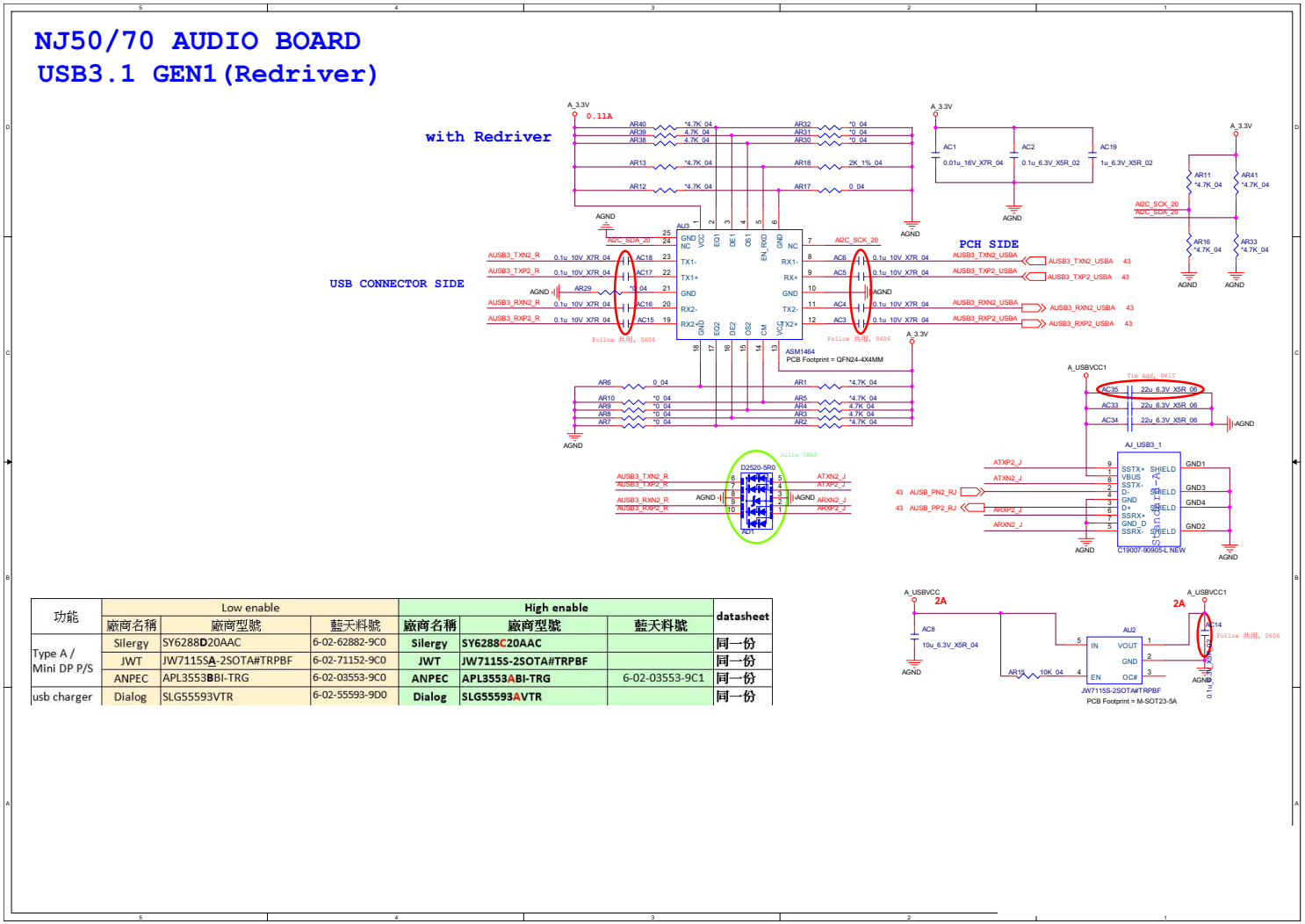

功能	Low enable			High enable			datasheet
	廠商名稱	廠商型號	藍天料號	廠商名稱	廠商型號	藍天料號	
Type A / Mini DP P/S	Silergy	SY6288D20AAC	6-02-62882-9C0	Silergy	SY6288C20AAC		同一份
	JWT	JW7115SA-2SOTA#TRPBF	6-02-71152-9C0	JWT	JW7115S-2SOTA#TRPBF		同一份
	ANPEC	APL3553BBI-TRG	6-02-03553-9C0	ANPEC	APL3553ABI-TRG	6-02-03553-9C1	同一份
usb charger	Dialog	SLG55593VTR	6-02-55593-9D0	Dialog	SLG55593AVTR		同一份

Sheet 44 of 48
Audio Board

Click Board

Sheet 45 of 48
Click Board

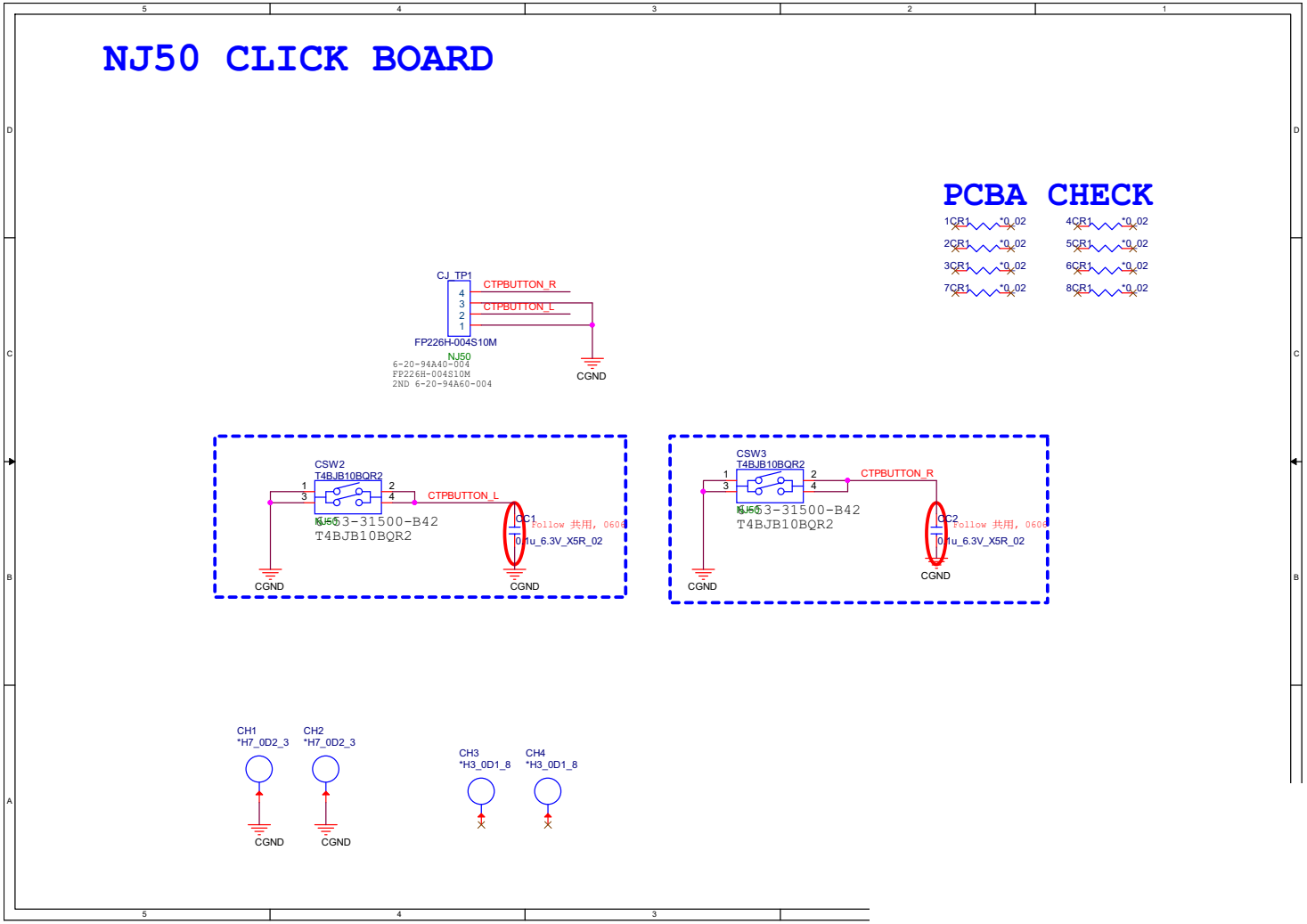

ODD to HDD Caddy

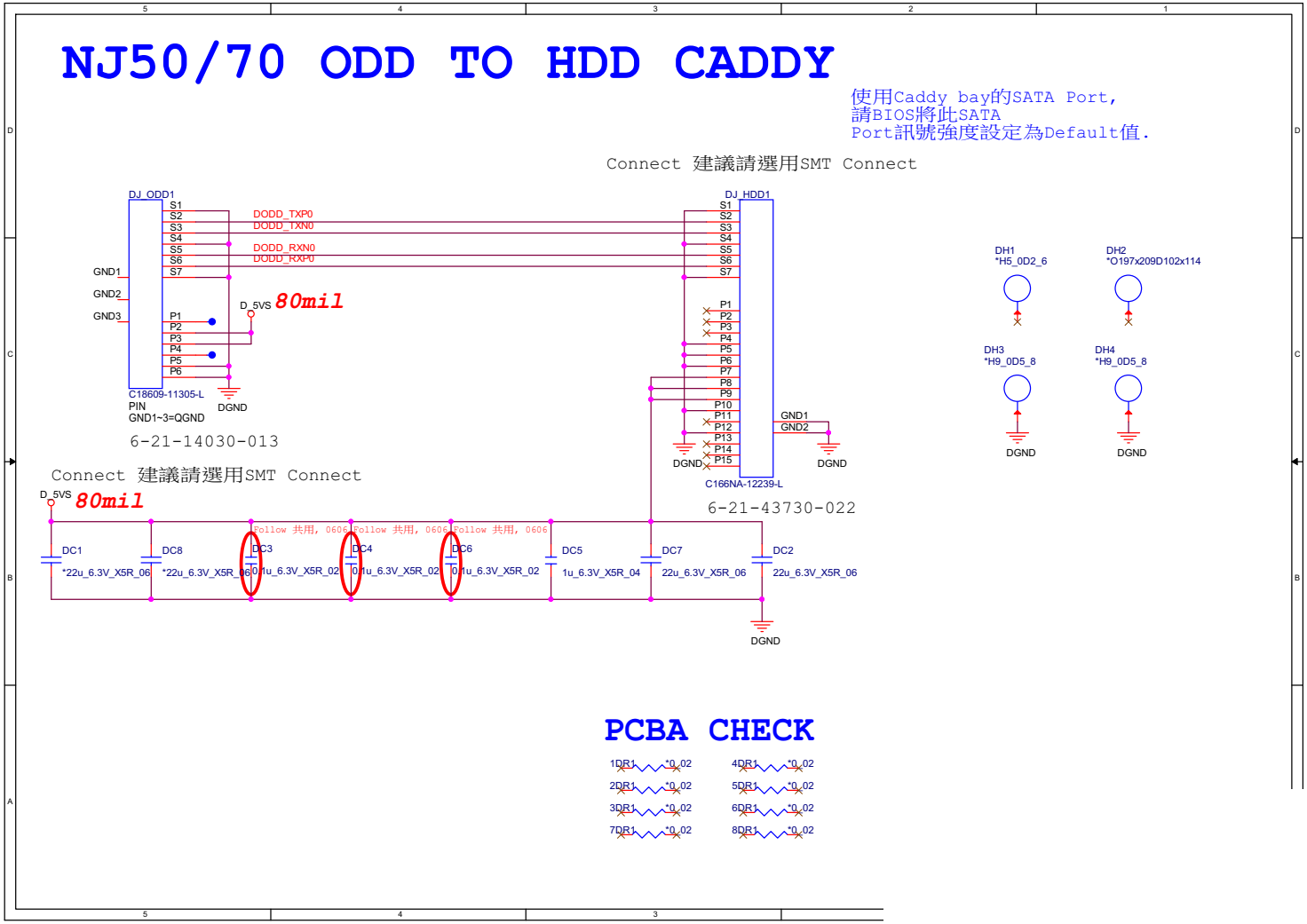

Sheet 46 of 48
ODD to HDD Caddy

B.Schematic Diagrams

LID SW Board

Sheet 47 of 48
LID SW Board

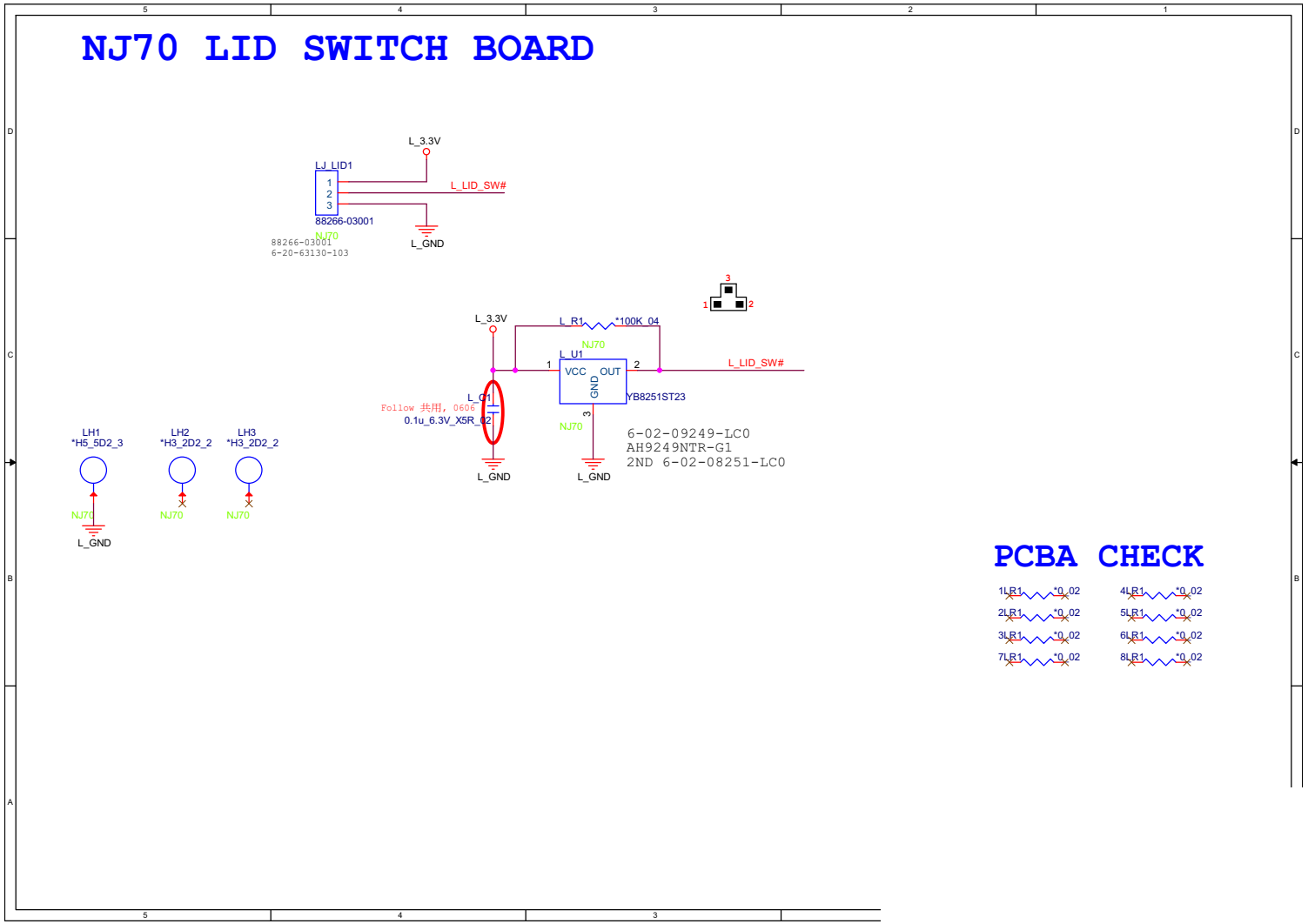

Power Seq.

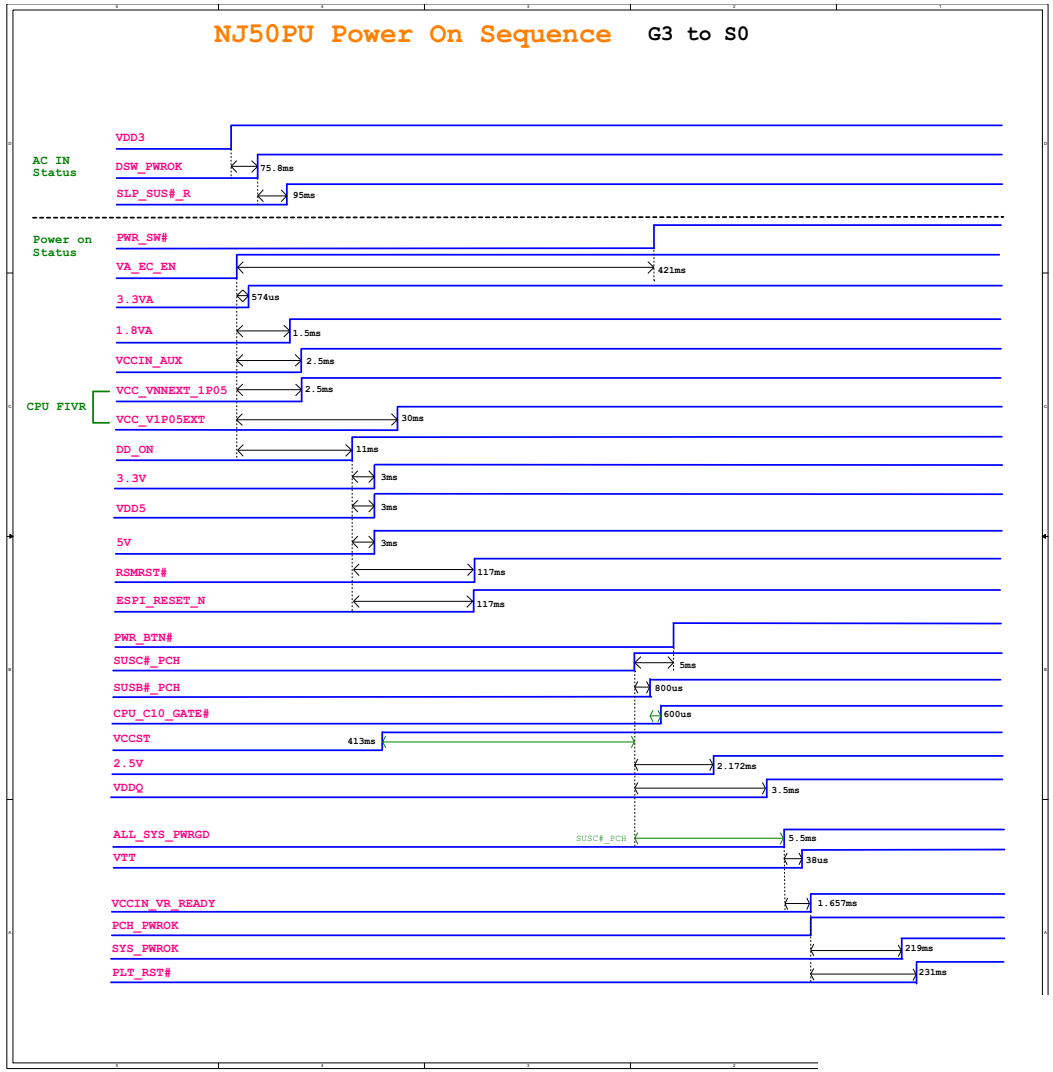

Sheet 48 of 48
Power Seq.